Instructions - Parts

AR-C/D Pour Gun

312053C

For use with non-flammable polyurethane foams, two-component coating systems (polyureas), and some two-component epoxy systems.
Not for use in explosive atmospheres.

Important Safety Instructions
Read all warnings and instructions in this manual. Save these instructions.

See page 2 for model information, including maximum working pressure and approvals.

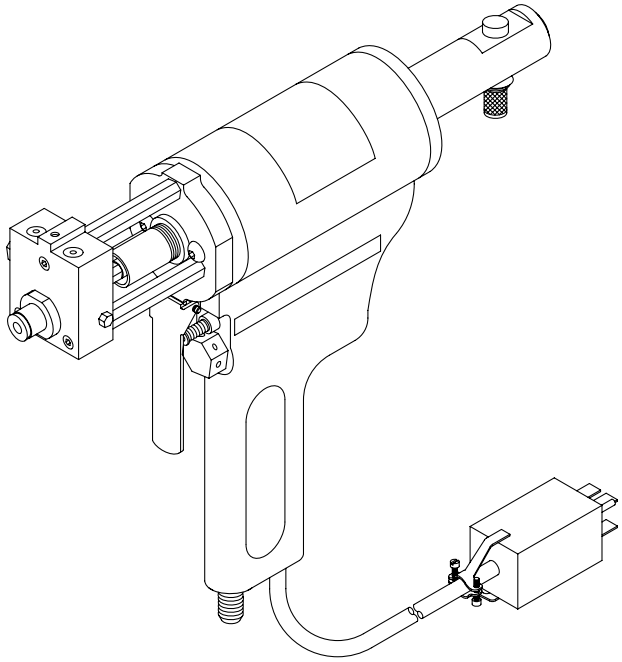

GRACO | GUSMER

HO03

PROVEN QUALITY. LEADING TECHNOLOGY.

Contents

Models 2
Warnings 3
Isocyanate Hazard 5
Components 6
Operation Basics 7
Isocyanate Hazard 7
Keep A and B Components Separate . . 7
Grounding 7
Safety Position 7
Air Hose Connection 8
Coupling Block 8
Switch to Automatic Mode 9
Initial Set Up 10
Daily Start-Up 11
Daily Shutdown 11
Pressure Relief Procedure 12
Maintenance 13
Gun Service Kits 13
Cleaning Procedure 13
Flush Gun 14
Troubleshooting 15
Repair 16
Pattern Control Tip 16
Screen Screw and Port Closure Plugs . 17
Valving Rod and Resilient Sleeve 18
Coupling Block and Check Valves 19
Impingers 20
Gun Block 21
Pressure Check Valving Rod Resilient Sleeve 22
Parts 24
Technical Data 33
Impinger Options 33
Graco Standard Warranty 34
Graco Information 34

Models

Part No.	Description	Maximum Working Pressure psi (MPa, bar)
298118	Auto AR-C Pour Gun	2000 (13.8, 138)
298119	Auto AR-D (375) Pour Gun	2000 (13.8, 138)
299920	Custom AR-C (250) Pour Gun	2000 (13.8, 138)
299921	Auto AR-C Pour Gun	2000 (13.8, 138)

Models do not include front and rear impingers; see **Impinger Options**, page 33.

Warnings

The following warnings are for the setup, use, grounding, maintenance, and repair of this equipment. The exclamation point symbol alerts you to a general warning and the hazard symbol refers to procedure-specific risk. Refer back to these warnings. Additional, product-specific warnings may be found throughout the body of this manual where applicable.

⚠ WARNING

FIRE AND EXPLOSION HAZARD

Flammable fumes, such as solvent and paint fumes, in **work area** can ignite or explode. To help prevent fire and explosion:

- Use equipment only in well ventilated area.
- Eliminate all ignition sources; such as pilot lights, cigarettes, portable electric lamps, and plastic drop cloths (potential static arc).
- Keep work area free of debris, including solvent, rags and gasoline.
- Do not plug or unplug power cords, or turn power or light switches on or off when flammable fumes are present.
- Ground all equipment in the work area. See **Grounding** instructions.
- Use only grounded hoses.
- Hold gun firmly to side of grounded pail when triggering into pail.
- If there is static sparking or you feel a shock, **stop operation immediately.** Do not use equipment until you identify and correct the problem.
- Keep a working fire extinguisher in the work area.

EQUIPMENT MISUSE HAZARD

Misuse can cause death or serious injury.

- Do not operate the unit when fatigued or under the influence of drugs or alcohol.
- Do not exceed the maximum working pressure or temperature rating of the lowest rated system component. See **Technical Data** in all equipment manuals.
- Use fluids and solvents that are compatible with equipment wetted parts. See **Technical Data** in all equipment manuals. Read fluid and solvent manufacturer's warnings. For complete information about your material, request MSDS forms from distributor or retailer.
- Check equipment daily. Repair or replace worn or damaged parts immediately with genuine manufacturer's replacement parts only.
- Do not alter or modify equipment.
- Use equipment only for its intended purpose. Call your distributor for information.
- Route hoses and cables away from traffic areas, sharp edges, moving parts, and hot surfaces.
- Do not kink or over bend hoses or use hoses to pull equipment.
- Keep children and animals away from work area.
- Comply with all applicable safety regulations.

⚠ WARNING

	ELECTRIC SHOCK HAZARD Improper grounding, setup, or usage of the system can cause electric shock. • Turn off and disconnect power at main switch before disconnecting any cables and before servicing equipment. • Connect only to grounded power source. • All electrical wiring must be done by a qualified electrician and comply with all local codes and regulations.
	SKIN INJECTION HAZARD High-pressure fluid from gun, hose leaks, or ruptured components will pierce skin. This may look like just a cut, but it is a serious injury that can result in amputation. **Get immediate surgical treatment.** • Do not point gun at anyone or at any part of the body. • Do not put your hand over the spray tip. • Do not stop or deflect leaks with your hand, body, glove, or rag. • Follow **Pressure Relief Procedure** in this manual, when you stop spraying and before cleaning, checking, or servicing equipment.
	PRESSURIZED EQUIPMENT HAZARD Fluid from the gun/dispense valve, leaks, or ruptured components can splash in the eyes or on skin and cause serious injury. • Follow **Pressure Relief Procedure** in this manual, when you stop spraying and before cleaning, checking, or servicing equipment. • Tighten all fluid connections before operating the equipment. • Check hoses, tubes, and couplings daily. Replace worn or damaged parts immediately.
	TOXIC FLUID OR FUMES HAZARD Toxic fluids or fumes can cause serious injury or death if splashed in the eyes or on skin, inhaled, or swallowed. • Read MSDS's to know the specific hazards of the fluids you are using. • Store hazardous fluid in approved containers, and dispose of it according to applicable guidelines. • Always wear impervious gloves when spraying or cleaning equipment.
	PERSONAL PROTECTIVE EQUIPMENT You must wear appropriate protective equipment when operating, servicing, or when in the operating area of the equipment to help protect you from serious injury, including eye injury, inhalation of toxic fumes, burns, and hearing loss. This equipment includes but is not limited to: • Protective eyewear • Clothing and respirator as recommended by the fluid and solvent manufacturer • Gloves • Hearing protection

Isocyanate Hazard

Spraying materials containing isocyanates creates potentially harmful mists, vapors, and atomized particulates.

Read material manufacturer's warnings and material MSDS to know specific hazards and precautions related to isocyanates.

Prevent inhalation of isocyanate mists, vapors, and atomized particulates by providing sufficient ventilation in the work area. If sufficient ventilation is not available, a supplied-air respirator is required for everyone in the work area.

To prevent contact with isocyanates, appropriate personal protective equipment, including chemically impermeable gloves, boots, aprons, and goggles, is also required for everyone in the work area.

Components

Overall View

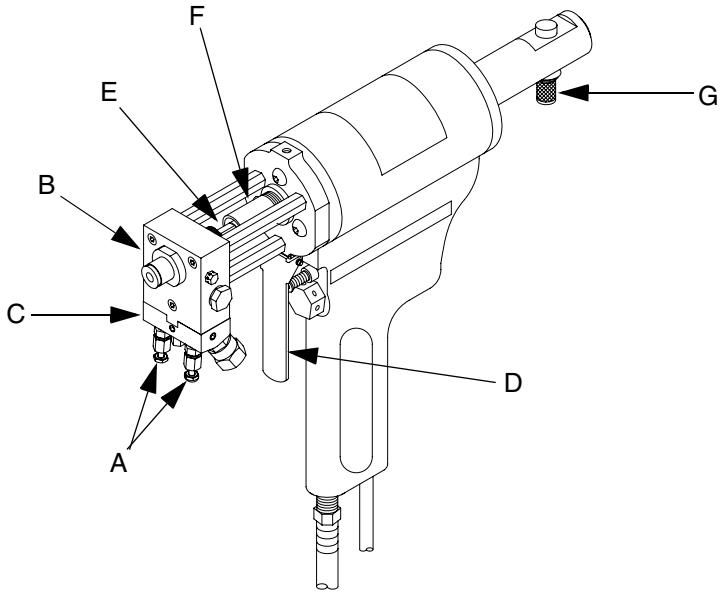

Gun Block

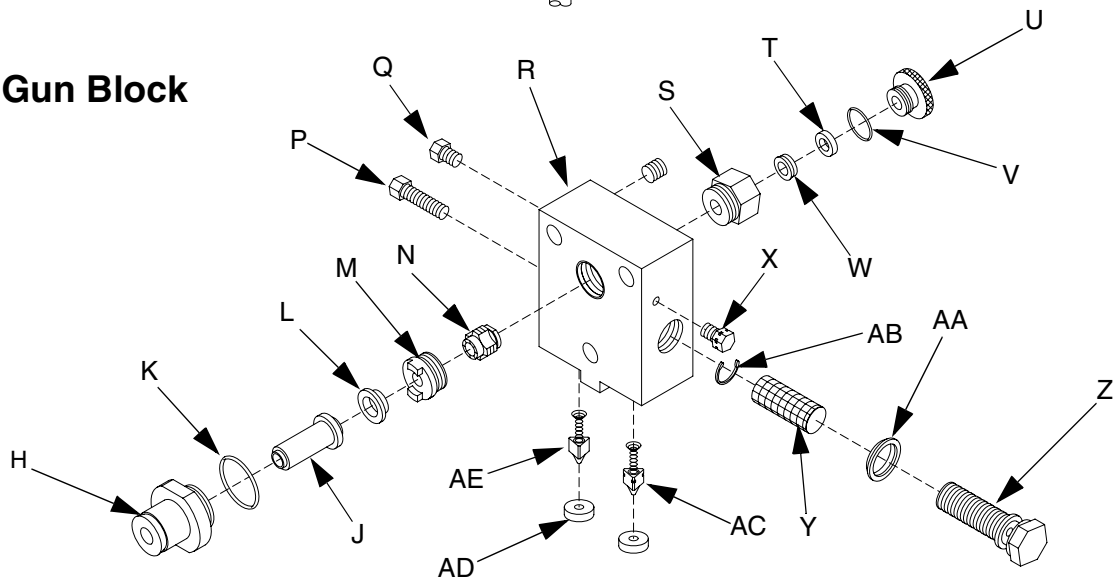

Key:

A Manual Valves
B Gun Block
C Coupling Block
D Trigger
E Valving Rod
F Piston Rod
G Valving Rod Adjustment Knob
H Pattern Control Tip
J O-ring
K Front Packing
L Front Impinger
M Throat
N Rear Impinger
P Screen Screw Mounting Screw
Q R-Port Closure Screw
R Gun Block
S Resin Seal Retainer
T Spacer
U Resin Seal Screw
V O-ring
W Resin Packing
X A-Port Closure Screw
Y Gun Block Screen
Z Gun Block Screen Screw
AA Screen Screw Seal
AB Snap Ring
AC A-Check Valve
AD Coupling Block Gaskets
AE R-Check Valve

Operation Basics

To prevent accidental gun operation, always disconnect air supply before servicing gun or anytime gun is not in use.

Isocyanate Hazard

Read Material Safety Data Sheet (MSDS) to know the specific hazards of isocyanates. Use equipment in a well-ventilated area. Wear respirator, gloves, and protective clothing when using isocyanates.

Keep A and B Components Separate

CAUTION

To prevent cross-contamination of the gun's wetted parts, do not interchange A component (isocyanate) and B component (resin) parts. The gun is shipped with the A side on the left.

Grounding

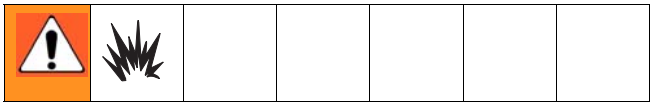

Check your local electrical code and proportioner manual for detailed grounding instructions.

Ground the spray gun through connection to a Graco-approved grounded fluid supply hose.

Safety Position

The gun has a two-position valving rod adjustment stop. The SERVICE (CLOSED) position permits both material inlet ports to remain closed when gun is triggered.

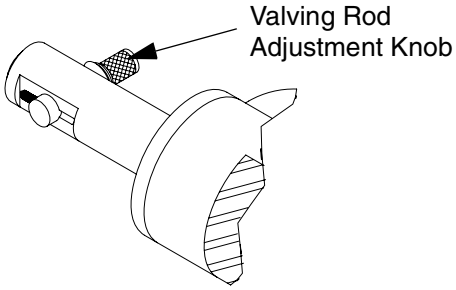

Engage Safety Stop

To engage safety stop, push in valving rod adjustment knob and turn clockwise to CLOSED (rear detent) position, then release.

Disengage Safety Stop

To disengage safety stop, push in valving rod adjustment knob and turn counterclockwise to place in OPEN (forward detent) position, then release.

Air Hose Connection

Connect Air Hoses

Pull back sleeve of female fitting, insert male fitting and slide sleeve forward to secure connection.

Disconnect Air Hoses

Pull back sleeve of female fitting and pull out male fitting.

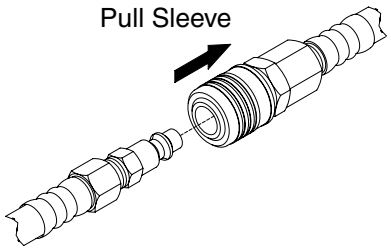

Coupling Block

Chemical hoses are joined to gun block by coupling block to ease installation and removal of gun.

Manual Valves

Triggering gun with manual valves closed may cause crossover if gun ports contain residual chemical.

Never open manual valves unless coupling block is secured to gun or exit port is directed into flush pail.

1. Open manual valves using 5/16 in. nut driver; turn manual valves counterclockwise approximately three full turns. Do not open until it bottoms out.
2. Close manual valves by turning fully clockwise.

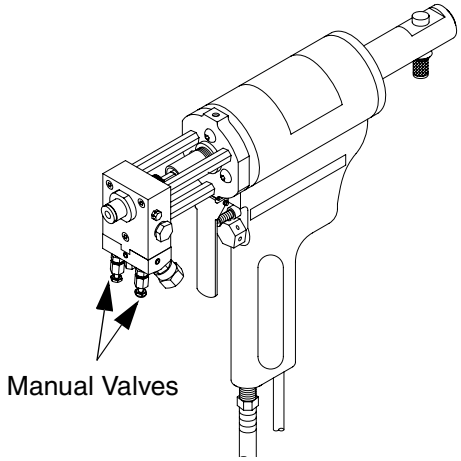

Removal and Installation

To prevent release of pressurized chemicals, close both manual valves before removing coupling block.

Remove Coupling Block

1. Set safety stop to SERVICE (CLOSED).
2. Disconnect air hose.
3. Close both manual valves.
4. Remove coupling block mounting screw.
5. Separate coupling block from gun.
6. Wipe mating surfaces of gun block and coupling block to remove residual chemical.

7. Cover exposed openings with grease.

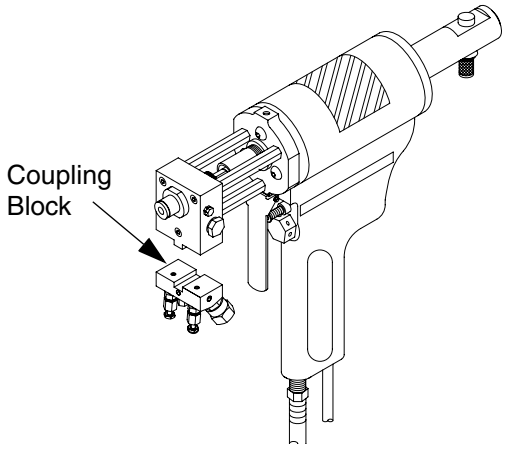

Install Coupling Block

Replace nicked, damaged, or worn coupling block gaskets.

1. With gaskets in place, fit coupling block to gun block.
2. Insert coupling block mounting screw and use 5/16 in. nut driver to tighten to gun block.

Switch to Automatic Mode

If you have the TX-50 Timer, counter, or remote switch, the AR-C/D Pour gun can be used in an automatic mode. In the automatic mode, the trigger is bypassed and the gun will open on command of the TX-50 Timer, counter, or remote switch.

The mode selector is on the circuit board of the gun handle. The two positions of the control plug are normal (NORM) and automatic (AUTO). When the mode selector is in AUTO position, the effect is the same as manually depressing the gun trigger. Therefore, whenever electrical power is applied to the gun, the gun will open.

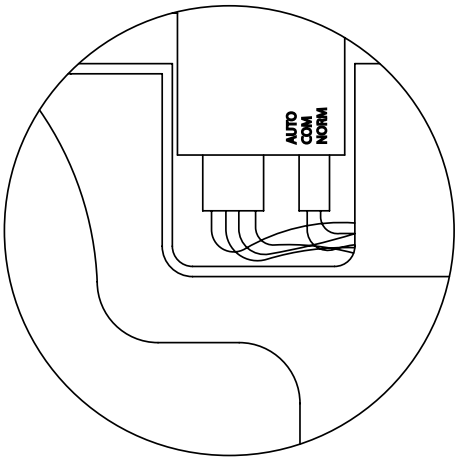

Normal Mode

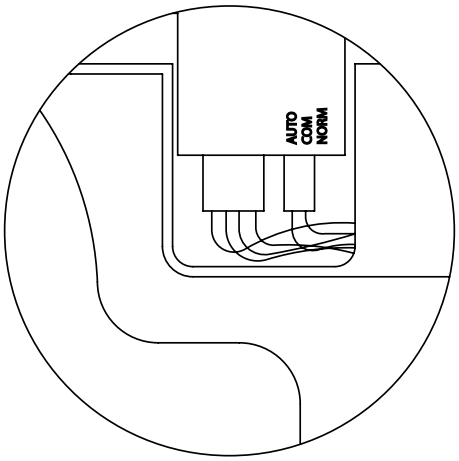

Automatic Mode

Initial Set Up

1. Remove coupling block from gun.
2. Check valving rod clearance in closed position. Rod should extend approximately 1/32 in. (1 mm) beyond tip of mixing chamber.
3. Adjust valving rod travel to initial setting. See **Valving Rod and Resilient Sleeve**, page 18.
4. Connect air supply hose to gun.
5. Connect A-isocyanate hose (red-taped) to notched fitting on coupling block. Then connect R-resin hose (blue-taped) to fitting without notches on coupling block.
6. Close both manual valves.
7. Pressurize the A and R chemical hoses and check for leaks. (See Proportioning Unit manual.)
8. Bleed air from chemical hoses:
   a. Hold coupling block with exit ports pointed into disposable container.
   b. Open each manual valve to allow trapped air to escape. Bleed each side until chemical is free of air.
   c. Close both manual valves.
9. Use clean cloth soaked in gun cleaner to wipe clean coupling block and its mating surfaces.

CAUTION
To avoid accumulation of dirt and other contaminants, do not apply grease to mating surfaces of coupling block.

10. Install coupling block to gun block.
11. Proceed with Daily Start-up procedure or Shutdown procedure as required.

Daily Start-Up

Ensure gun is attached to coupling block and air hose, and the proportioning unit is at desired temperature and pressure.

1. Ensure gun is mounted onto gun block.
2. Connect air supply to gun; see **Air Hose Connection**, page 8.
3. Connect electric wire harness to gun.
4. Trigger gun multiple times to ensure valving rod moves through its full travel quickly and freely.

CAUTION

Sluggish valving rod action may result in valving rod sticking in open position when fluid pressure is applied. Always have a 5/16 in. nut driver available to quickly close manual valves on coupling block.

5. Open both manual valves; see **Manual Valves**, page 8.
6. Test spray on disposable surface and adjust spray pattern as needed.

Do not exceed 2000 psi (13.8 MPa, 138 bar) maximum fluid working pressure even in static de-triggered conditions, or check valve damage may result.

Daily Shutdown

Follow when gun is out of service for any length of time. Daily disassembly of gun for cleaning is not recommended if it has been operating properly. However, if you remove the gun from the coupling block, flush and clean thoroughly.

1. Set safety stop to OPEN.
2. Close both manual valves.
3. Disconnect air supply from gun.
4. Shutdown proportioning unit as required. See Proportioner manual.
5. Clean as required.

Do not disassemble gun daily for cleaning if it is operating properly. However, if gun is removed from coupling block, it must be flushed and cleaned thoroughly.

Pressure Relief Procedure

Relieve pressure before cleaning or repairing gun.

1. Close both manual valves.

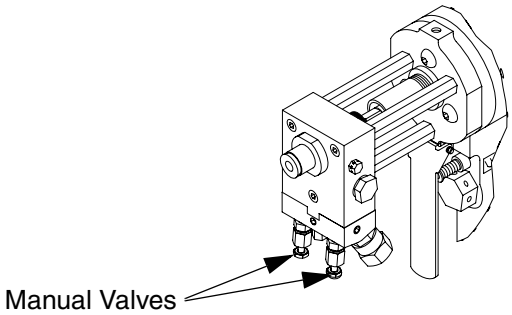

2. Set safety stop to OPEN.
3. Trigger gun onto cardboard or into waste container to relieve pressure.
4. Release gun trigger, set safety stop to SERVICE (CLOSED), and close manual valves.

If fluid in hose and proportioner is still under pressure, follow Pressure Relief Procedure in your Proportioner manual.

To relieve pressure in hose after gun is removed, place fluid manifold over containers, facing away from you. Very carefully open fluid valves. Under high pressure, fluid will spray sideways from fluid ports.

Maintenance

Gun Service Kits

Use either the 1-Quart Gun Service Kit (296980) or 3-Gallon Gun Service Kit (296981) to perform daily flushing of spray gun without disassembly

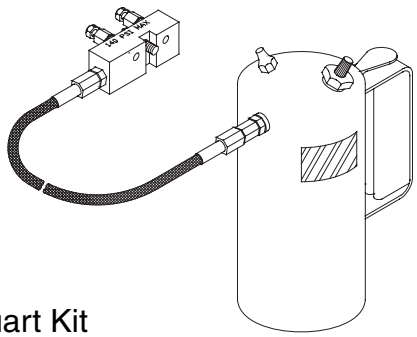

1-Quart Kit

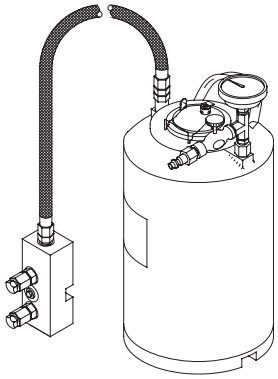

3-Gallon Kit

For more information about the 1-Quart Gun or the 3-Gallon Gun Service Kit, see Manual 311340.

Cleaning Procedure

To avoid static sparking that may result in fire or explosion, ensure all equipment in cleaning procedure is grounded. Do not clean on or near foamed or coated surfaces or any other flammable surfaces or objects.

This procedures makes use of the 1-Quart or 3-Gallon Gun Service Kit.

1. Set safety stop to SERVICE (CLOSED).
2. Close both manual valves.
3. Remove gun from coupling block.
4. Disconnect air and electric.
5. Attach service block of gun service kit to gun, and then tighten using 5/16 in. nut driver.
6. Pressurize Service Kit container up to 100 psi. Do not exceed 100 psi (0.7 MPa, 7 bar).
7. Open one manual valve on service block.
8. Connect air to gun. Set safety stop to OPEN.
9. Hold gun against grounded waste container.
10. Trigger gun and 1-Quart Gun Service Kit. Spray into waste container until there is a fine, unobstructed mist of gun cleaner.
11. Release trigger and close manual valve on service block.

12. Repeat steps 10-14 for other side of gun.
13. Remove service block of gun service kit from spray gun.
14. Set safety to SERVICE (CLOSED).
15. Disconnect air supply.
16. Clean removed component parts.

Do not use metal cleaning devices to clean plastic components.

Flush Gun

To avoid static sparking that may result in fire or explosion, ensure all equipment in flushing procedure is grounded. Do not flush on or near foamed or coated surfaces.

1. Set safety stop to SERVICE (CLOSED).
2. Close both manual valves.
3. Loosen screen screw and then remove by hand.
4. Use flush can to thoroughly flush screen screw and screen screw cavity.
5. Service gun by following **Troubleshooting** procedures, page 15.

Troubleshooting

Problem	Cause	Solution
Interruption of flow of one material	Running out of material	Supply more material to proportioner
Change of color in mixed product	Materials in proportioner are too viscous	Check with material supplier for recommended temperature range that should be maintained to control viscosity.
Only one component coming out of gun	Filter screens are clogged	Flush gun. See **Flush Gun**, page 14.
Poor spray pattern	Materials in proportioner are too viscous	Check with material supplier for recommended temperature range that should be maintained to control viscosity.
	Impinger slots are clogged	See **Impingers**, page 20, for service instructions.
Minor weepage around throat in gun block	Valving rod is worn	Perform **Pressure Check Valving Rod Resilient Sleeve** procedure; see page 22.
	Valving rod or throat is damaged	Perform **Pressure Check Valving Rod Resilient Sleeve** procedure; see page 22.

Repair

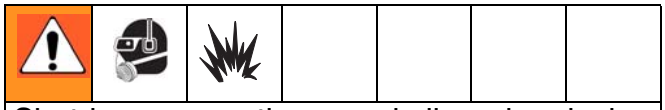

Shutdown proportioner and allow chemicals to cool before servicing gun.

Clean A and R components in separate containers to avoid cross contamination.

Tools Required

- flush can
- impinger cleanout brush
- 5/16 in. nut driver
- utility knife
- pin vise without cleanout spade
- gun block component hole cleanout brush
- check valve removal tool
- throat wrench
- pattern control tip front impinger packing seal cleanout tool
- gasket removal tool
- wooden stick
- pry tool/rear impinger wrench
- pressure flush kit (optional)

Pattern Control Tip

1. Set safety stop to SERVICE (CLOSED).

CAUTION
Ensure safety stop is set to SERVICE (CLOSED) while removing pattern control tip. If it is not, the resilient sleeve of the valving rod my be damaged.

2. Loosen pattern control tip with a 10 in. adjustable wrench. Once loosened, unthread tip by hand.

If front packing and/or front impinger remain on valving rod when pattern control tip is removed, release trigger and carefully slide these parts off valving rod.

3. Remove front impinger from front packing. It is not necessary to remove front packing if no damage to packing is evident or suspected.

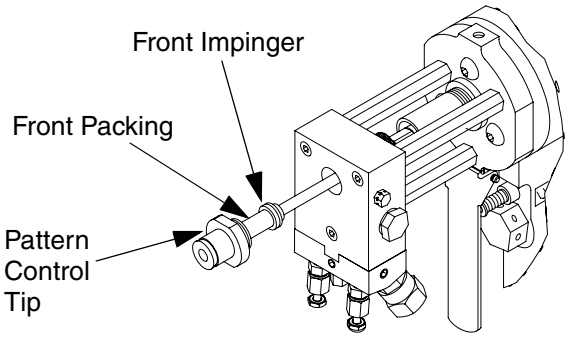

4. Remove pattern control tip o-ring and front packing from pattern control tip. If packing cannot be removed by hand, use pliers. However, this will require replacement of packings.

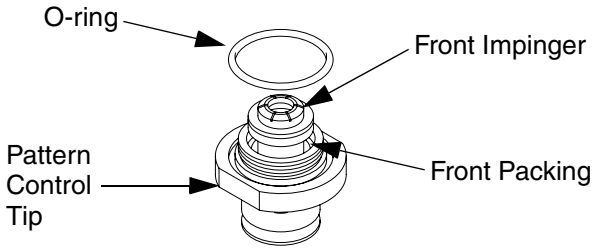

5. Use pattern control tip cleanout tool to clean inside walls of tip. Flush tip and clean surrounding external surface.

6. Set pattern control tip and front impinger and packing aside. Reassembly instructions are included in **Valving Rod and Resilient Sleeve**, page 18.

Screen Screw and Port Closure Plugs

1. Perform **Pattern Control Tip** steps; see page 16.

2. Use a 5/16 in. nut driver to remove screen screw mounting screw while holding large hex head of screen screw with finger or against solid surface.

3. Slide screen screw assembly out of gun block. Allow excess Isocyanate material to drain.

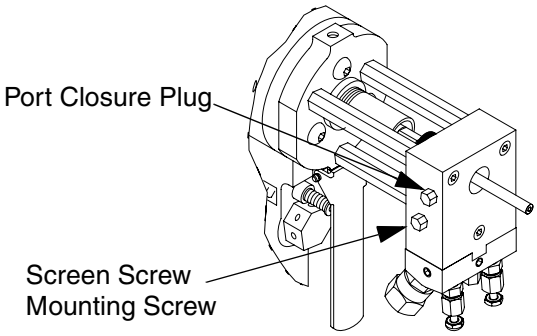

4. Flush assembly and place it in gun cleaner.

5. Remove port closure plugs with nut driver. Clean with gun cleaner and inspect for damage. Replace if necessary.

6. Remove screen from screen screw. Soak in gun cleaner or replace if clogged or dirty.

7. Clean screen screw cavity. If **any** particles are visible, clean with clean out drills and flush with gun cleaner. If more than 20% of screen is blocked, replace screen.

8. Inspect screen screw seal for damage. Replace if necessary.

9. Reinstall screen screw assembly and tighten mounting screw.

10. Insert port closure plugs.

Valving Rod and Resilient Sleeve

Disassembly and Cleaning

Inadvertent actuation of trigger with spring retainer case removed could cause serious injury.

1. Follow **Pressure Relief Procedure**, page 12.

2. Remove spring retainer case by grasping handle firmly and pushing in on retainer case with palm of hand. Simultaneously rotate case a quarter turn counterclockwise to remove case from locking collar.

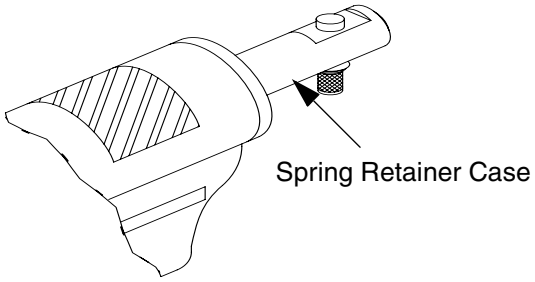

3. Cover open end of air cylinder with hand protected by a cloth and depress gun trigger.

The following two steps must be accomplished next to prevent accidental operation of gun.

4. Disconnect airline to gun. Pull back on outer ring of quick disconnect coupling to disconnect air from gun.

5. Disconnect electrical harness from gun.

6. Examine resilient sleeve assembly for damage. Structural damage or wear will show as:

   - scratches or chaffing of outside wall of sleeve;
   - movement or extrusion of sleeve in either threaded mandrils;
   - reduction in sleeve diameter.

A uniform depression of equal depth around diameter of sealing point of throat is normal.

7. If any damage or wear exists, replace both valving rod resilient sleeve and front packing.

8. Remove valving rod resilient sleeve assembly if it needs to be replaced.

   a. Use a 6 in. adjustable wrench to unthread coupler toward resilient sleeve. If necessary, use a 5/16 in. nut driver to hold valving rod.

   b. Once coupler is loose, unthread resilient sleeve assembly.

Reassembly

1. If valving rod resilient sleeve assembly was removed or is being replaced, use the following steps:

   a. Thread coupler onto resilient sleeve assembly by hand as far as it will go toward sleeve. There should be approximately 1/16 in. (1.5 mm) clearance between coupler and valving rod.

b. Use a 6 in. adjustable wrench and a 5/16 in. nut driver to securely tighten coupler.

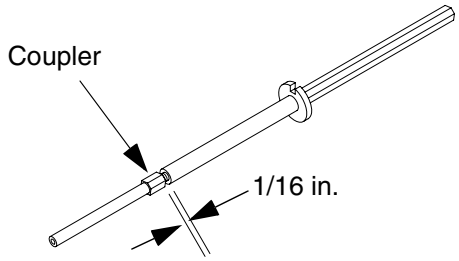

2. Align slot on valving rod with pin in cylinder and push valving rod assembly all the way forward and rotate 180 degrees.

There should be some resistance when pushing valving rod assembly through throat.

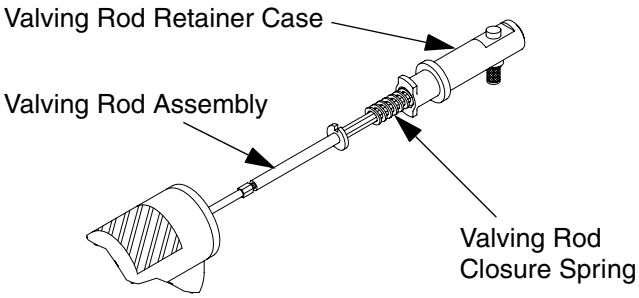

3. Insert valving rod closure spring into cylinder and over end of valving rod.

4. Push valving rod retainer case over spring into cylinder and rotate clockwise (approximately a quarter rotation) until retainer case snaps into position.

Coupling Block and Check Valves

Disassembly

1. Follow **Pressure Relief Procedure**, page 12.

2. Use 5/16 in. nut driver to remove coupling block mounting screw, and separate gun from coupling block.

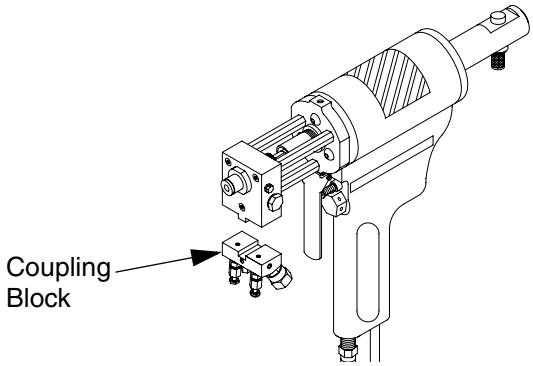

3. Flush both material ports on face of coupling block to prevent material buildup.

4. Remove check valve gasket. Place end of coupling block gasket removal tool into notches next to gaskets and pry them out.

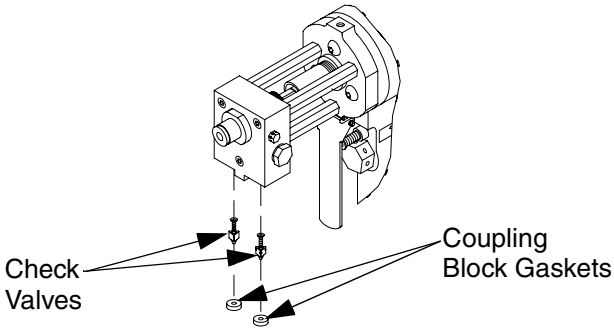

5. Flush open ports and check valves with gun cleaner.

6. Remove check valves by pressing them inward and popping them out, or by using the magnet.

Iso check valve is notched for identification purposes.

7. If material buildup prevents easy removal, use three-pronged end of check valve removal tool to grasp check valve and turn free.

Opposite end of check valve removal tool is designed to clean check valve cavity.

8. Place all parts in gun cleaner and flush exposed ports.

Reassembly

1. Inspect seats on gaskets for nicks. Replace seats if damaged.

2. Insert check valves (notched valve on left side) and gaskets into gun block pressing gaskets in place.

Gaskets are designed for use on either side. Carefully check angular seat to ensure sealing point of check valve.

3. Place coupling block to gun and use 5/16 in. nut driver to install coupling block mounting screw.

Impingers

Disassembly and Cleaning

1. Follow **Pressure Relief Procedure**, page 12.

2. Perform **Pattern Control Tip** steps; see page 16.

3. Remove rear impinger from throat. Hold throat in place with throat wrench and use rear impinger wrench to loosen impinger from throat. Continue un-threading by hand.

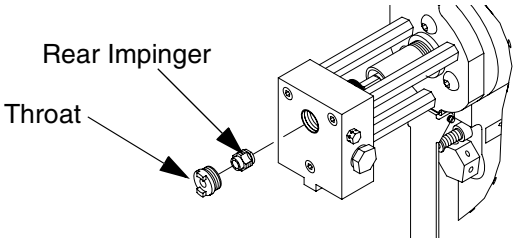

4. Flush gun block with gun cleaner.

5. Inspect seating surface (area around center hole) within throat for damage. Use a soft object, such as a wooden stick or soft brush, to clean surface.

CAUTION
Never use a sharp or hard metal object for cleaning impingers or throat. Seating surface of throat is highly polished to ensure sealing of resilient sleeve.

6. Use impinger cleaning brush to clean both external and internal threads of throat.

7. Use impinger cleaning brush to clean rear and front impingers. Use cleanout spade to clean each injection slot of both impingers.

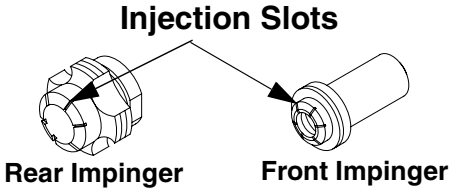

Reassembly

1. Assemble rear impinger into throat. Thread slotted end of rear impinger into female thread of throat. Hold throat in place with throat wrench and use rear impinger wrench to tighten impinger into throat.

2. Thread throat assembly by hand into gun block. Use throat wrench to tighten.

Front impinger should contact throat surface about 1/2 to 3/4 turns from actual seating of throat to gun block surface. This compression creates the internal seal within front portion of chamber.

3. Assemble front impinger and pattern control tip. Insert front packing into pattern control tip. Place front impinger over end of front packing. Place pattern control tip o-ring into groove on pattern control tip.

4. Assemble pattern control tip assembly on gun block. Turn valving rod adjustment knob to SERVICE (CLOSED) position. Depress trigger and thread pattern control tip into gun block by hand.

5. Release trigger to align components and trigger again holding valving rod rearward. Use 10 in. adjustable wrench to tighten pattern control tip onto gun block.

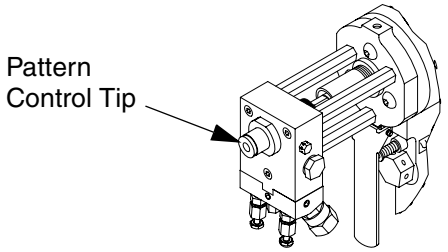

Gun Block

In severe cases of material buildup, it may be necessary to remove the gun block and soak it in gun cleaner.

1. Follow **Pressure Relief Procedure**, page 12.

2. Remove the pattern control tip and front impinger; see **Pattern Control Tip**, page 16.

3. Remove coupling block and check valves; see **Coupling Block and Check Valves**, page 19.

4. Remove rear impinger and throat; **Impingers**, page 20.

5. Remove gun block mounting screws.

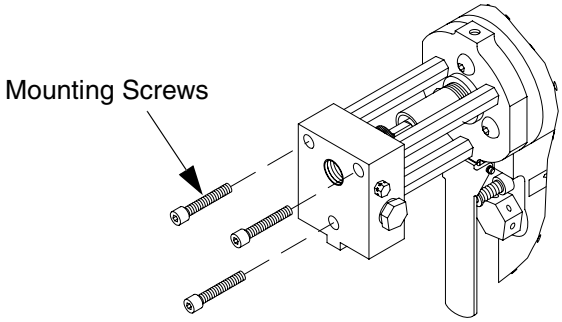

6. Remove resin (rear) seal screw and resin seal o-rings.

7. Soak gun block in gun cleaner.

CAUTION
Do not allow gun block or component parts to soak in gun cleaner for extended periods of time, such as overnight, as certain solvents may cause corrosion or pitting. Do not soak gun block o-rings in gun cleaner. To clean o-rings, dip in gun cleaner and immediately wipe dry.

8. Reassemble resin (rear) seal screw and resin seal o-rings into gun block.

9. Reinstall gun block using gun block mounting screws.

Pressure Check Valving Rod Resilient Sleeve

Perform this test to check seal created by interference fit between resilient sleeve and opening in throat.

1. Follow **Pressure Relief Procedure**, page 12.

2. Remove the pattern control tip and front impinger; see **Pattern Control Tip**, page 16.

3. Remove coupling block and check valves; see **Coupling Block and Check Valves**, page 19.

4. Remove rear impinger and throat; **Impingers**, page 20.

5. Turn on proportioner, and with only the resin manual valve open, determine if there are resin leaks at front (Iso) surface of throat

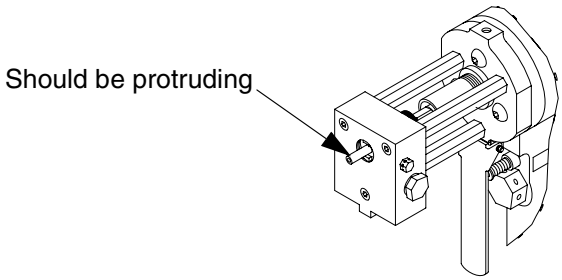

6. Set safety stop to SERVICE (CLOSED), and then pull trigger to determine if weepage occurs in this position.

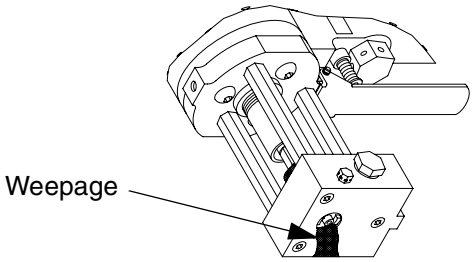

7. If weepage is observed in either step, replace valving rod and/or throat. See **Valving Rod and Resilient Sleeve**, page 18, to replace valving rod. See **Impingers**, page 20, to replace throat.

If throat is not properly seated in gun block, material leakage will occur around outer area of throat. If this occurs, insert throat wrench over resilient sleeve and tighten throat.

8. Close resin manual valve.

Parts

Models 299920 and 299921

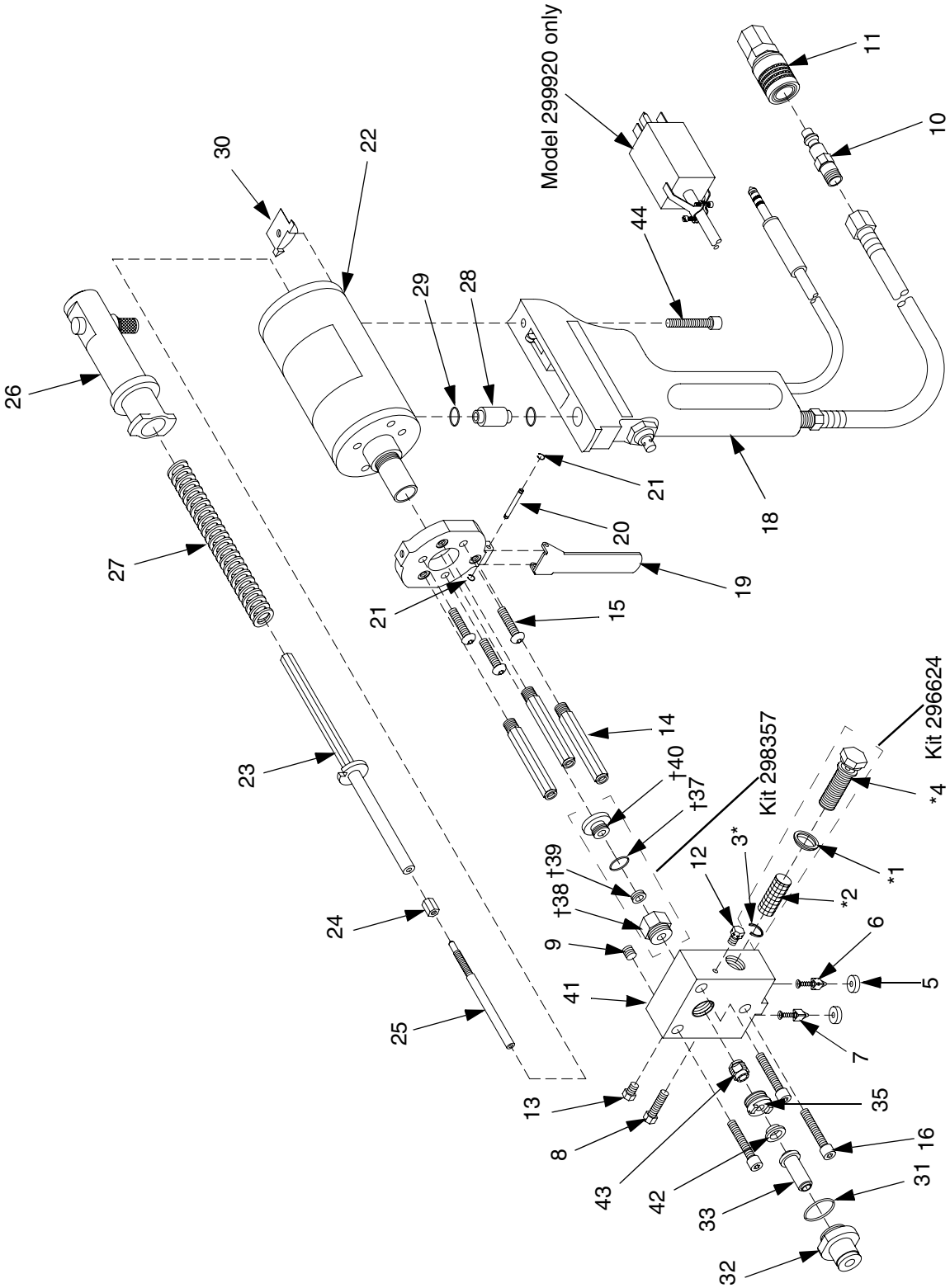

Models 299920 and 299921

Ref.	Part	Description	Qty.
1*	296621	SEAL, screw, screen	1
2*	296622	SCREEN, block, gun	1
3*	295595	RING, retaining	1
4*	295175	SCREW, screen, gun block	1
5	296128	GASKET, block, gasket	2
6	295623	VALVE, check, A	1
7	295624	VALVE, check, R	1
8	297307	SCREW, mounting, 1 in.	1
9	295693	PLUG, pipe	1
10	295596	PLUG, coupler	1
11	208536	COUPLER, line, air	1
12	297308	SCREW, closure, A-port	1
13	296129	SCREW, closure, R-port	1
14	299923	BLOCK, gun spacer w/stud	3
15		SCREW, 1/4-28 x 1in. (25 mm) button-hd cap	3
	299924		
	298117	1/4-28 NYLOC	
16	297150	SCREW, cap, socket head; 1/4-28 x 1-1/4 in. (31 mm)	3
17	299925	HANDLE, gun mounting plate	1
18		HANDLE, assy	1
	299950		
	299909		
19	299951	TRIGGER, lever	1
20	298354	PIN, mounting	1
21	299475	RETAINER	1
22	299960	CYLINDER, air assy	1
23	299962	ROD, valving	1
24	297312	COLLAR, lock	1
25	296136	SLEEVE	1
26	299966	RETAINER, spring case assy	1
27	297313	SPRING, closure, 250	1
28	299969	COUPLING, connecting	1
29	297314	O-RING, fluoroelastomer	2
30	299970	STOP, notched	1
31	103413	PACKING, o-ring	1
32	299973	TIP, pattern control, 250	1
33	296137	PACKING, front	1
35	296138	PACKING, throat	1
37†	103648	PACKING, o-ring	1
38†	298355	SEAL, retainer, 250	1
39†	296140	PACKING, R	1
40†	298356	SEAL, screw, 250	1
41	285795	BLOCK, gun assy	1
42		IMPINGER, front; see page 33 for part numbers	1
43		IMPINGER, rear; see page 33 for part numbers	1
44		SCREW, cap, socket head; 1/4-28 x 1-1/4 in. (31 mm)	
	297150		1
	299908		1

✿ *Model 299920 only.*

★ *Model 299921only.*

* *Gun Block Screen Screw Kit 296624*

† *250 Resin Seal Kit 298357*

Models 298118 and 298119

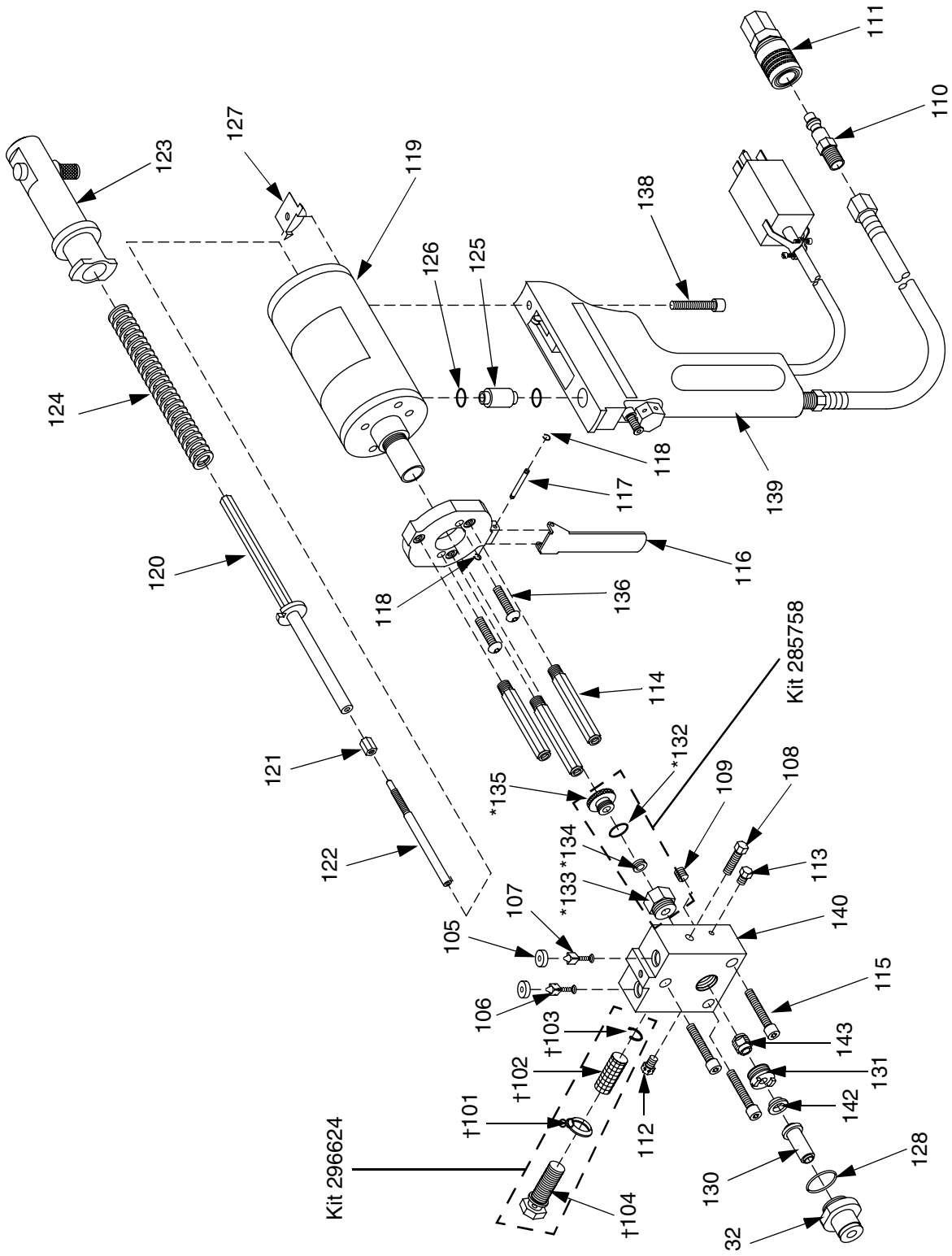

Models 298118 and 298119

Ref.	Part	Description	Qty.
101*	296621	SEAL, screw, screen	1
102*	296622	SCREEN, block, gun	1
103*	295595	RING, retaining	1
104*	295175	SCREW, screen, gun block	1
105	295128	GASKET, block, gasket	2
106	295623	VALVE, check, A	1
107	295624	VALVE, check, R	1
108	297307	SCREW, mounting, 1in.	1
109	295693	PLUG, pipe	1
110	295596	PLUG, coupler	1
111	208536	COUPLER, line, air	1
112	297308	SCREW, closure, A-port	1
113	296129	SCREW, closure, R-port	1
114	299923	BLOCK, gun spacer w/stud	3
115	297150	SCREW, cap, socket head	3
116	299951	TRIGGER, lever	1
117	298354	PIN, mounting	1
118	299475	RETAINER	1
119		CYLINDER, air assy	1
	✓299960		
	✖299961		
120	299962	ROD, valving	1
121	297312	COLLAR, lock	1
122	296136	SLEEVE	1
123	299966	RETAINER, spring case assy	1
124	✓297313	SPRING, closure, 250	1
	✖299968	SPRING, closure, 375	1
125	299969	COUPLING, connecting	1
126	297314	O-RING, fluoroelastomer	2
127	299970	STOP, notched	1
128	103413	PACKING, o-ring	1
130		PACKING, front	1
	✓296137		
	✖297142		
131		PACKING, throat	1
	✓296138		
	✖299989		
132†	103648	PACKING, o-ring	1
133†		SEAL, retainer	1
	✓298355		
	✖285755		1
134†		PACKING, R	1
	✓285832		
	✖297143		
135†	298356		1
	✓298356	SEAL, screw, 250	
	✖285756	SEAL, screw, 375	
136	298117	SCREW, 1/4-28 x 1 (25 mm) button-hd cap	2
137	299907	HANDLE, gun mounting PLATE	1
138	299908	SCREW, 1/4-28 x 1-1/4 shcs	1
139		HANDLE, assy	1
	✓299909		
	✖299911		
140	285795	BLOCK, gun assy	1
142		IMPINGER, front; see page 33 for part numbers	1
143		IMPINGER, rear; see page 33 for part numbers	1

✓ *Model 298118 only.*

✖ *Model 298119 only.*

* *Gun Block Screen Screw Kit 296624*

† *375 Resin Seal Kit 298358*

Gun Handle Assemblies

For Gun Models 299921, 298118, 298119

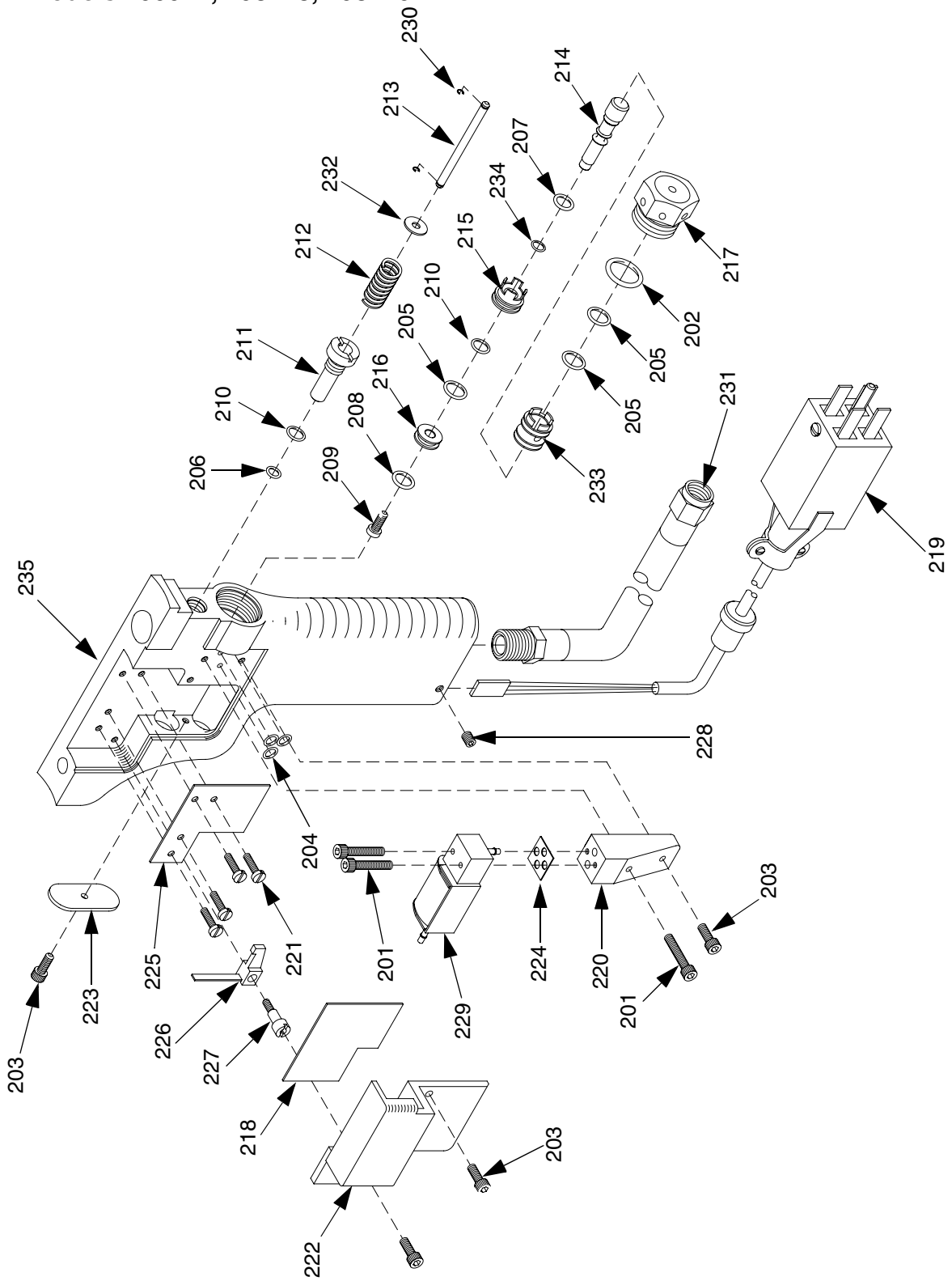

Gun Handle
Assemblies 299909 and 299911

◆ *Assembly 299909 only.*

❖ *Assembly 299911 only.*

Ref.	Part	Description	Qty.
201	298116	SCREW, 4-40 x 3/4 shcs	3
202	108195	PACKING, o-ring	1
203	C19950	SCREW, cap, sch	4
204	296066	O-RING, piston, pump	3
205	106555	PACKING, o-ring	3
206	106560	PACKING, o ring	1
207	C20988	PACKING, o-ring	1
208	112085	PACKING, o-ring	1
209	299917	SCREW, 5-40 x 3/8 button-hd cap	1
210	295685	O-RING	2
211	299926	TRIGGER, bushing	1
212	299927	SPRING,	1
213	299928	TRIGGER, actuator pin	1
214	299929	SPOOL	1
215	299930	RING, seal	1
216	299931	ROD, piston	1
217	299932	VALVE, exhaust cap	1
218	299933	INSULATOR, circuit board	1
219		WIRE, gun harness assy	1
	◆299935		
	❖299912		
220	299936	MANIFOLD, air	1
221	299937	SCREW, 2-56 x 7/16 phms	4
222	299938	COVER	1
223	299939	PLATE, rear cover	1
224	299940	GASKET, pilot valve	1
225		SWITCH	1
	◆298353		
	❖299913		
226	299135	SWITCH, arm lever	1
227	299020	SCREW, shoulder	1
228	102279	SCREW, set, socket	1
229	299948	VALVE, solenoid valve assy	1
230	299475	RETAINER	2
231	299971	HOSE, 1/4 x 2 in. (mxf) air	1
232	285776	WASHER, packing washer	1
233	295439	LINER, valve, spool	1
234	114375	PACKING, o-ring	1
235	299910	HANDLE	1

Gun Handle Assembly

For Gun Model 299920

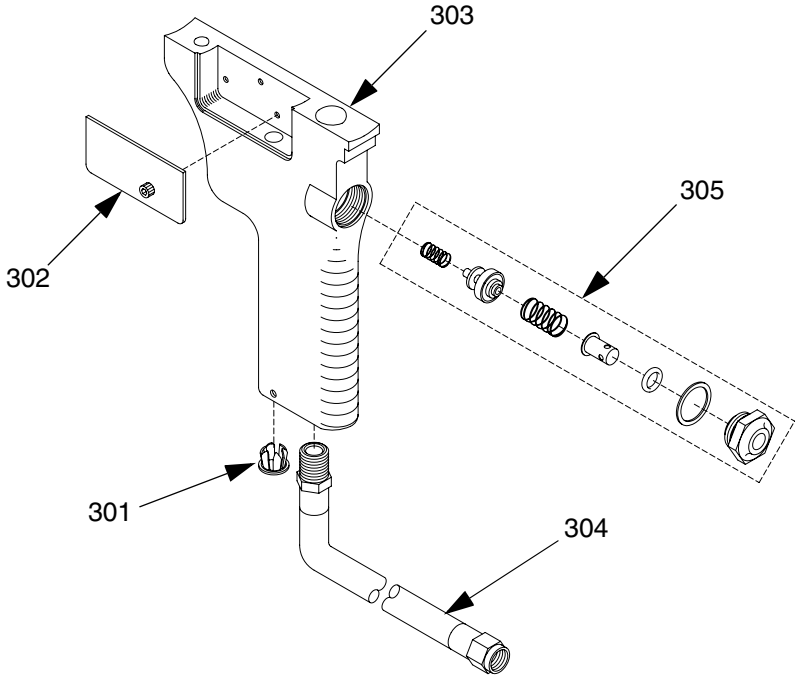

Ref.	Part	Description	Qty.
301	299946	PLUG, hole	1
302	299947	COVER, gun switch with screw	1
303	299949	HANDLE, gun	1
304	299971	HOSE, 1/4 x 2 in. mfx, air	1
305	299707	VALVE, air, assy	1

Air Cylinder Assemblies

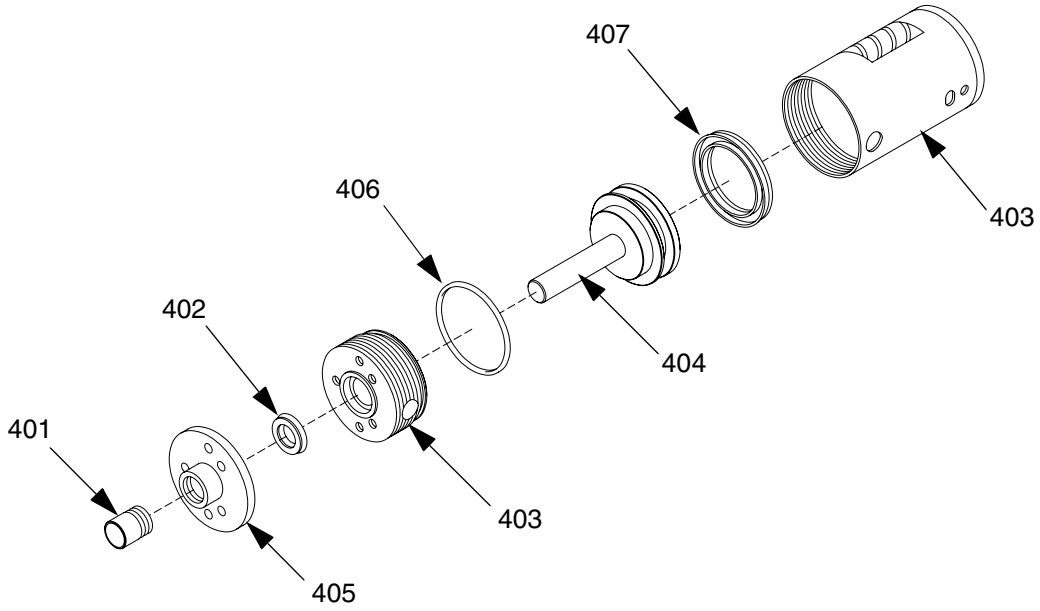

Assemblies 299960 and 299961

Ref.	Part	Description	Qty.
401	299954	COVER, dust	1
	299955	COVER, dust	1
402	297309	SEAL, u-cup, fluoroelastomer	1
403	299956	CYLINDER, air	1
404	299957	PISTON, assy.	1
	299958	PISTON, assy.	1
405	299959	CYLINDER, flange assy.	1
406	297310	O-RING, fluoroelastomer	1
407	297311	SEAL, u-cup, fluoroelastomer	1

Assembly 299960 only.

Assembly 299961 only.

Coupling Block Assemblies

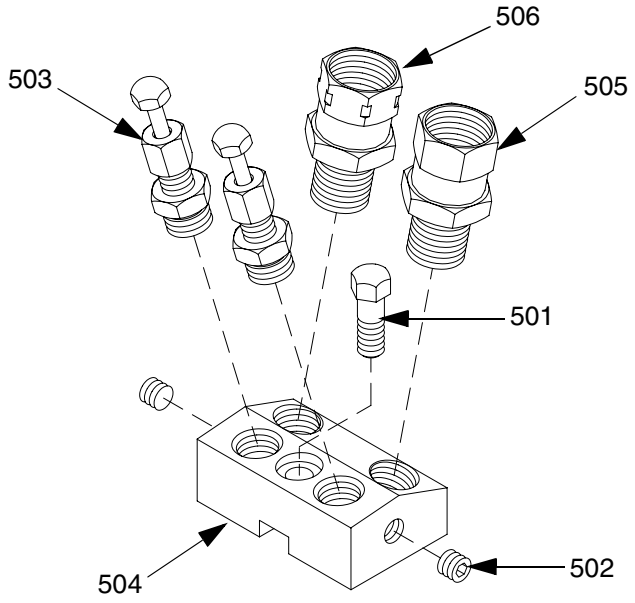

Coupling Block 285771

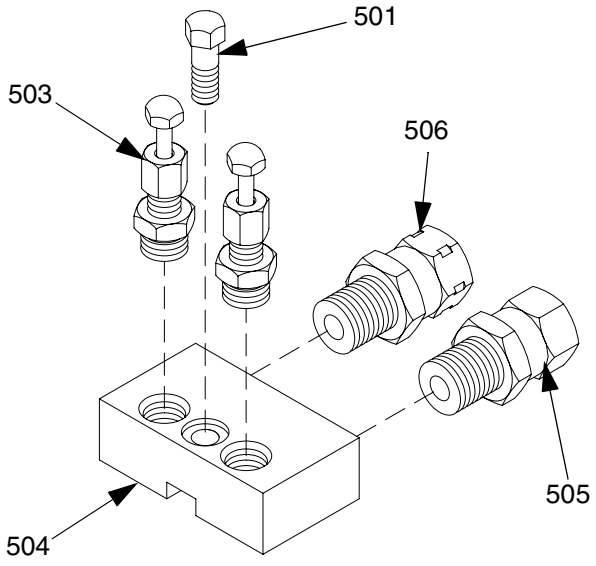

Coupling Block 285775

Ref.	Part	Description	Qty.
501	295619	SCREW, mounting	1
502	295693	PLUG, pipe (285771 only)	2
503	295430	VALVE, manual	2

Ref.	Part	Description	Qty.
504		BLOCK, coupling	1
	285774	285771	
	285773	285775	
505	117506	FITTING, swivel, 1/4 npt x #6 JIC	1
506	117595	FITTING, swivel, 1/4 npt x #5 JIC	1

Assembly 285771 only.

Assembly 285775 only.

Technical Data

Category	Data
Maximum Fluid Working Pressure	2000 psi (13.8 MPa, 138 bar)
Minimum Air Inlet Pressure	90 psi (0.62 MPa, 6.2 bar)
Maximum Air Inlet Pressure	120 psi (0.84 MPa, 8.4 bar)
Maximum Output (flow rate)	25 lbs/min *(Models 298118, 299920, 299921)* 60 lbs/min *(Model 298119)*
Air Inlet Size	1/4 npt, quick disconnect nipple
A Component (ISO) Inlet Size	#5 JIC
R Component (Resin) Inlet Size	#6 JIC
Length	12.5 in. (318 mm)
Height	9.5 in. (241 mm)
Width	2.8 in. (71 mm)
Weight	6.7 lbs (3.0 kg)

Impinger Options

Impinger (C Size)				
Front		Rear		Orifice Area Factor
Part	Style	Part	Style	
299974	23-B-1	299990	23-B-1	900
299975	33-B-1	None	33-B-1	1200
299976	33-C-1	299991	33-C-1	1800
299977	34-C-1	299992	34-C-1	2400
299980	46-B-1	299995	46-B-1	3000
299978	36-C-1	299993	36-C-1	3600
None	46-C-1	299996	46-C-1	4500
299982	48-C-1	299997	48-C-1	6000
299983	58-C-1	299999	58-C-1	7200

Table 1: Impinger Options - C Size

Impinger (D Size)				
Front		Rear		Orifice Area Factor
Part	Style	Part	Style	
299979	33-C-1	None	33-C-1	1800
None	36-C-1	299994	36-C-1	3600
None	48-C-1	299998	48-C-1	6000
None	58-C-1	261789	58-C-1	7200
299984	59-D-1	None	59-D-1	10800
299985	66-D-1	285750	66-D-1	8400
None	78-D-1	285751	78-D-1	12800
261790	79-D-1	None	79-D-1	14400
299987	90-D-1	285752	90-D-1	18000
299988	94-D-1	None	94-D-1	25200

Table 2: Impinger Options - D Size

Graco Standard Warranty

Graco warrants all equipment referenced in this document which is manufactured by Graco and bearing its name to be free from defects in material and workmanship on the date of sale to the original purchaser for use. With the exception of any special, extended, or limited warranty published by Graco, Graco will, for a period of twelve months from the date of sale, repair or replace any part of the equipment determined by Graco to be defective. This warranty applies only when the equipment is installed, operated and maintained in accordance with Graco's written recommendations.

This warranty does not cover, and Graco shall not be liable for general wear and tear, or any malfunction, damage or wear caused by faulty installation, misapplication, abrasion, corrosion, inadequate or improper maintenance, negligence, accident, tampering, or substitution of non-Graco component parts. Nor shall Graco be liable for malfunction, damage or wear caused by the incompatibility of Graco equipment with structures, accessories, equipment or materials not supplied by Graco, or the improper design, manufacture, installation, operation or maintenance of structures, accessories, equipment or materials not supplied by Graco.

This warranty is conditioned upon the prepaid return of the equipment claimed to be defective to an authorized Graco distributor for verification of the claimed defect. If the claimed defect is verified, Graco will repair or replace free of charge any defective parts. The equipment will be returned to the original purchaser transportation prepaid. If inspection of the equipment does not disclose any defect in material or workmanship, repairs will be made at a reasonable charge, which charges may include the costs of parts, labor, and transportation.

THIS WARRANTY IS EXCLUSIVE, AND IS IN LIEU OF ANY OTHER WARRANTIES, EXPRESS OR IMPLIED, INCLUDING BUT NOT LIMITED TO WARRANTY OF MERCHANTABILITY OR WARRANTY OF FITNESS FOR A PARTICULAR PURPOSE.

Graco's sole obligation and buyer's sole remedy for any breach of warranty shall be as set forth above. The buyer agrees that no other remedy (including, but not limited to, incidental or consequential damages for lost profits, lost sales, injury to person or property, or any other incidental or consequential loss) shall be available. Any action for breach of warranty must be brought within two (2) years of the date of sale.

GRACO MAKES NO WARRANTY, AND DISCLAIMS ALL IMPLIED WARRANTIES OF MERCHANTABILITY AND FITNESS FOR A PARTICULAR PURPOSE, IN CONNECTION WITH ACCESSORIES, EQUIPMENT, MATERIALS OR COMPONENTS SOLD BUT NOT MANUFACTURED BY GRACO. These items sold, but not manufactured by Graco (such as electric motors, switches, hose, etc.), are subject to the warranty, if any, of their manufacturer. Graco will provide purchaser with reasonable assistance in making any claim for breach of these warranties.

In no event will Graco be liable for indirect, incidental, special or consequential damages resulting from Graco supplying equipment hereunder, or the furnishing, performance, or use of any products or other goods sold hereto, whether due to a breach of contract, breach of warranty, the negligence of Graco, or otherwise.

FOR GRACO CANADA CUSTOMERS

The Parties acknowledge that they have required that the present document, as well as all documents, notices and legal proceedings entered into, given or instituted pursuant hereto or relating directly or indirectly hereto, be drawn up in English. Les parties reconnaissent avoir convenu que la rédaction du présente document sera en Anglais, ainsi que tous documents, avis et procédures judiciaires exécutés, donnés ou intentés, à la suite de ou en rapport, directement ou indirectement, avec les procédures concernées

Graco Information

***TO PLACE AN ORDER,* contact**

WWW.DIAMONDLINERS.COM
Mailing Address
9507 Santa Fe Springs Road
Santa Fe Springs, CA 90670
Phone
(562) 781-1045 or (800) 543-1212
Fax
(562) 781-1045
Email
info@diamondliners.com

All written and visual data contained in this document reflects the latest product information available at the time of publication. Graco reserves the right to make changes at any time without notice.

This manual contains English. MM 312053

Graco Headquarters: Minneapolis
International Offices: Belgium, China, Japan, Korea

GRACO INC. P.O. BOX 1441 MINNEAPOLIS, MN 55440-1441
Copyright 2007, Graco Inc. is registered to I.S. EN ISO 9001
www.graco.com
Revised 12/2008