Instructions

246475 Hose Adapter

309743B

To use 1/2 in. Reactor™ Heated Hose Assemblies with non-Reactor heated hose assemblies

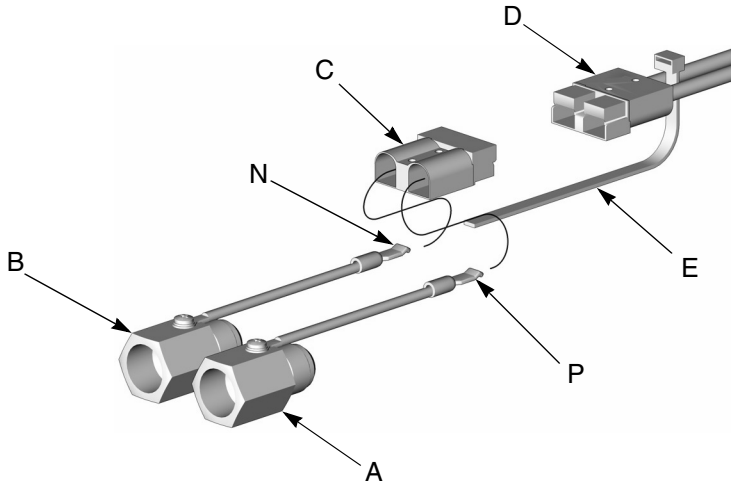

TI2885A

1. Connect adapters (A, B) to the non-Reactor hose assembly. Do not cross thread or overtighten. Component A (ISO) hoses are marked red and component B (RESIN) hoses are marked blue. The fittings are sized differently to ensure proper installation.
2. Insert B (RESIN) electrical contact (N) into the negative (-) side of connector (C). Ensure that contact is fully inserted and locked.
3. Insert A (ISO) electrical contact (P) into the positive (+) side of connector (C). Ensure that contact is fully inserted and locked.
4. Connect the Reactor Heated Hose Assembly to the adapter male fittings. Do not cross thread or overtighten. Component A (ISO) hoses are marked red and component B (RESIN) hoses are marked blue. The fittings are sized differently to ensure proper installation.

Continued on back.

PROVEN QUALITY. LEADING TECHNOLOGY.

Graco Inc. P.O. Box 1441 Minneapolis, MN 55440-1441
Copyright 2002, Graco Inc. is registered to I.S. EN ISO 9001

WARNING

Isolate all hose fluid connections with insulator boots, to prevent electrical shorts in the heated hose system.

Always connect a Reactor Heated Hose directly to the proportioner fluid manifold, to ensure proper electrical isolation and reduce the risk of shock.

5. Plug adapter connector (C) into connector (D) of Reactor Heated Hose Assembly. Secure with plastic tie (E) supplied. Install insulator boots on all hose fluid connections.

6. Refer to the proportioner operation manual for complete setup instructions.

To connect a Reactor Heated Hose Assembly to a non-Reactor gun whip hose, loosen the screws on the adapter fittings and rotate the wires 180°. Male threads will now face away from the connector. Retighten screw and follow steps above.

Graco Information

TO PLACE AN ORDER, contact your Graco distributor, or call this number to identify the distributor closest to you:

1-800-367-4023 Toll Free
612-623-6921
612-378-3505 Fax

All written and visual data contained in this document reflects the latest product information available at the time of publication. Graco reserves the right to make changes at any time without notice.

Sales Offices: Minneapolis, Detroit
International Offices: Belgium Korea, Hong Kong, Japan

GRACO INC. P.O. BOX 1441 MINNEAPOLIS, MN 55440-1441
www.graco.com
Printed in USA 309743B

02/2003