Operation, Parts, Service, Repair

GX-7A™, GX-7® DI, and GX-7 400 Spray Guns

311321R
EN

For use with non-flammable polyurethane foams, two-component coating systems (polyureas), and some two-component epoxy systems. For professional use only.

See page 2 for model information.

3500 psi (24 MPa, 240 bar) Maximum Working Pressure

Important Safety Instructions
Read all warnings and instructions in this manual. Save these instructions.

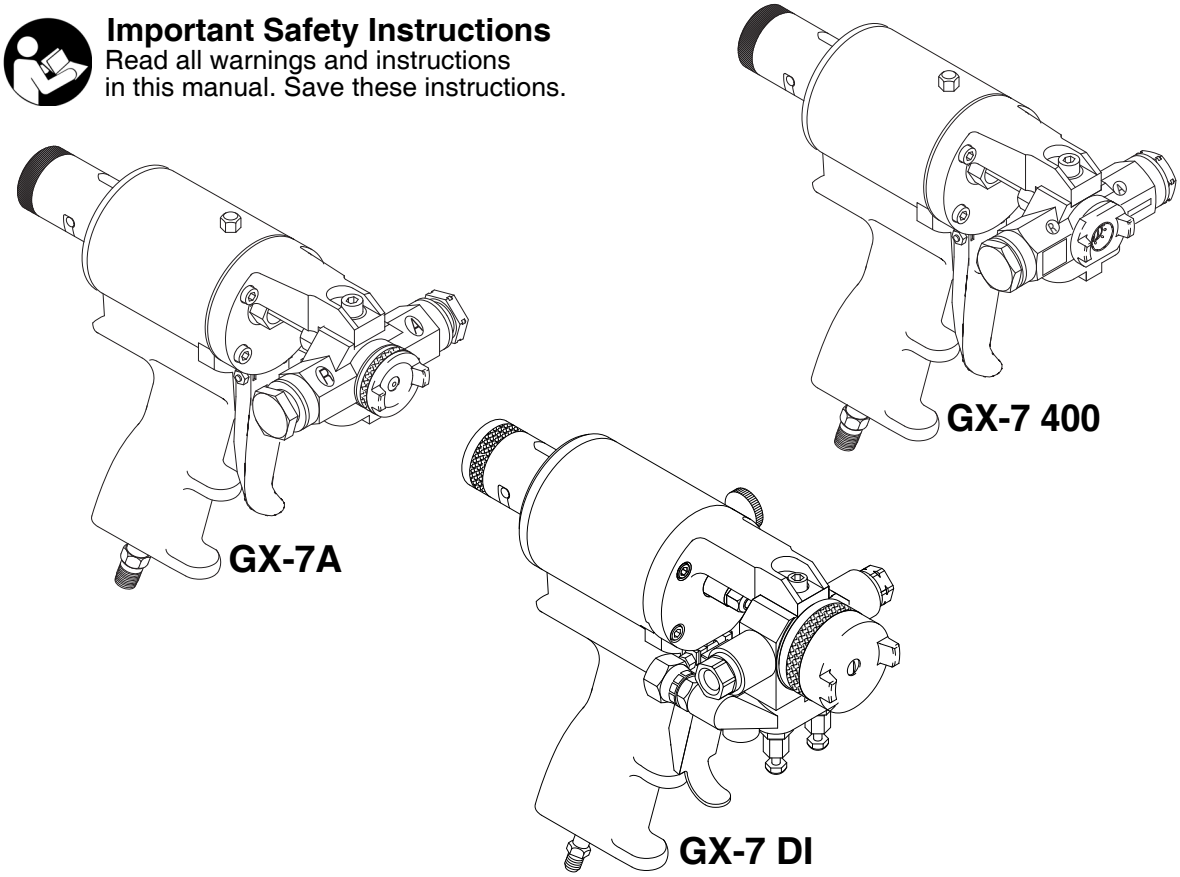

GRACO | GUSMER

PROVEN QUALITY. LEADING TECHNOLOGY.

Contents

Models 2
Warnings 3
Important Two-Component Material Information . 5
Isocyanate Conditions 5
For all applications except spray foam 6
Material Self-ignition 6
Keep Components A and B Separate 6
Moisture Sensitivity of Isocyanates 6
Foam Resins with 245 fa Blowing Agents 7
Changing Materials 7
Overall View 8
Centerline Components 10
Mixing Module 12
Operation Basics 13
Isocyanate Hazard 13
Keep A and B Components Separate 13
Grounding 13
Safety Position 13
Air Hose Connection 14
Coupling Block 15
Air Inlet Configuration 16
Mixing Module and PCD Installation 17
Valving Rod Adjustment 18
Valving Rod Adjustment 18
Initial Set Up 19
Daily Start-up 20
Daily Shutdown 20
Pressure Relief Procedure 21
Maintenance 22
Gun Service Kits 22
Clean Spray Gun Procedure 22
Flush Gun 23
Repair 24
Service Screen Screw 24
Remove Centerline Components 24
Install Centerline Components 26
Replace End Cap and Air Piston Assembly . . . 27
Replace Trigger Valve O-Rings 28
Clean Mixing Module 29
Install Mixing Module 30
Clean Pattern Control Disc 31
Parts 32
GX-7A Model Final Assembly 32
GX-7 DI Model Final Assembly (295541) 34
GX-7 400 Model Final Assembly (295540) 36
GX-7A Model Handle Assembly (24K734) 38
GX-7 DI Model Handle Assembly (295809) . . . 40
GX-7 400 Model Handle Assembly (24K733) . . 42
Coupling Block Assembly (295383) 44
Specifications 45
GX-7A Mix Module Kit 45
Set-Up Chart for GX-7A Model 46
GX-7 400 Mix Module Kit 47
Set-up Chart for GX-7 400 Model 48
GX-7 DI Model Specifications 49
Tip Kits 50
Tool Kit 50
Technical Data 51
Graco Standard Warranty 52
Graco Information 52

Models

Part No.	Description	Includes: Mix Module	Includes: Tip
295540	GX-7 400	296859 (451)	296853 (212)
295541	GX-7 DI - 4/213	296901 (4)	296706 (213)
295542	GX-7A - 1/90	296909 (1)	296712 (90)
295543	GX-7A - 10/210	296906 (10)	296704 (210)
295544	GX-7A - 3/70	296226 (3)	296710 (70)
295545	GX-7A - 5/70	296923 (5)	296710 (70)

Warnings

The following general warnings are for the setup, use, grounding, maintenance, and repair of this equipment. Additional, more specific warnings may be found throughout the body of this manual where applicable. *Symbols appearing in the body of the manual refer to these general warnings. When these symbols appear throughout the manual, refer back to these pages for a description of the specific hazard.*

WARNING

PERSONAL PROTECTIVE EQUIPMENT

Always wear appropriate personal protective equipment and cover all skin when spraying, servicing equipment, or when in the work area. Protective equipment helps prevent serious injury, including long-term exposure; inhalation of toxic fumes, mists or vapors; allergic reaction; burns; eye injury and hearing loss. This protective equipment includes but is not limited to:

- A properly fitting respirator, which may include a supplied-air respirator, chemically impermeable gloves, protective clothing and foot coverings as recommended by the fluid manufacturer and local regulatory authority.
- Protective eyewear and hearing protection.

TOXIC FLUID OR FUMES HAZARD

Toxic fluids or fumes can cause serious injury or death if splashed in the eyes or on skin, inhaled or
swallowed.

- Read Safety Data Sheet (SDS) for handling instructions and to know the specific hazards of the fluids you are using, including the effects of long-term exposure.
- When spraying, servicing equipment, or when in the work area, always keep work area well ventilated and always wear appropriate personal protective equipment. See **Personal Protective Equipment** warnings in this manual.
- Store hazardous fluid in approved containers, and dispose of it according to applicable guidelines.

SKIN INJECTION HAZARD

High-pressure fluid from gun, hose leaks, or ruptured components will pierce skin. This may look like just a cut, but it is a serious injury that can result in amputation. **Get immediate surgical treatment.**

- Do not point gun at anyone or at any part of the body.
- Do not put your hand over the spray tip.
- Do not stop or deflect leaks with your hand, body, glove, or rag.
- Do not spray without tip guard and trigger guard installed.
- Engage trigger lock when not spraying.
- Follow **Pressure Relief Procedure** in this manual, when you stop spraying and before cleaning, checking, or servicing equipment.

WARNING

FIRE AND EXPLOSION HAZARD

Flammable fumes, such as solvent and paint fumes, in **work area** can ignite or explode. To help prevent fire and explosion:

- Use equipment only in well ventilated area.
- Eliminate all ignition sources; such as pilot lights, cigarettes, portable electric lamps, and plastic drop cloths (potential static arc).
- Keep work area free of debris, including solvent, rags and gasoline.
- Do not plug or unplug power cords, or turn power or light switches on or off when flammable fumes are present.
- Ground all equipment in the work area. See **Grounding** instructions.
- Use only grounded hoses.
- Hold gun firmly to side of grounded pail when triggering into pail.
- If there is static sparking or you feel a shock, **stop operation immediately.** Do not use equipment until you identify and correct the problem.
- Keep a fire extinguisher in the work area.

EQUIPMENT MISUSE HAZARD

Misuse can cause death or serious injury.

- Do not operate the unit when fatigued or under the influence of drugs or alcohol.
- Do not exceed the maximum working pressure or temperature rating of the lowest rated system component. See **Technical Data** in all equipment manuals.
- Use fluids and solvents that are compatible with equipment wetted parts. See **Technical Data** in all equipment manuals. Read fluid and solvent manufacturer's warnings. For complete information about your material, request MSDS forms from distributor or retailer.
- Check equipment daily. Repair or replace worn or damaged parts immediately with genuine Graco/Gusmer replacement parts only.
- Do not alter or modify equipment.
- Use equipment only for its intended purpose. Call your Graco/Gusmer distributor for information.
- Route hoses and cables away from traffic areas, sharp edges, moving parts, and hot surfaces.
- Do not kink or over bend hoses or use hoses to pull equipment.
- Keep children and animals away from work area.
- Comply with all applicable safety regulations.

PRESSURIZED EQUIPMENT HAZARD

Fluid from the gun/dispense valve, leaks, or ruptured components can splash in the eyes or on skin and cause serious injury.

- Follow **Pressure Relief Procedure** in this manual, when you stop spraying and before cleaning, checking, or servicing equipment.
- Tighten all fluid connections before operating the equipment.
- Check hoses, tubes, and couplings daily. Replace worn or damaged parts immediately.

PRESSURIZED ALUMINUM PARTS HAZARD

Do not use 1,1,1-trichloroethane, methylene chloride, other halogenated hydrocarbon solvents or fluids containing such solvents in pressurized aluminum equipment. Such use can cause serious chemical reaction and equipment rupture, and result in death, serious injury, and property damage.

Important Two-Component Material Information

Isocyanate Conditions

Spraying or dispensing fluids that contain isocyanates creates potentially harmful mists, vapors, and atomized particulates.

- Read and understand the fluid manufacturer's warnings and Safety Data Sheet (SDS) to know specific hazards and precautions related to isocyanates.
- Use of isocyanates involves potentially hazardous procedures. Do not spray with this equipment unless you are trained, qualified, and have read and understood the information in this manual and in the fluid manufacturer's application instructions and SDS.
- Use of incorrectly maintained or mis-adjusted equipment may result in improperly cured material.which could cause off gassing and offensive odors. Equipment must be carefully maintained and adjusted according to instructions in the manual.
- To prevent inhalation of isocyanate mists, vapors and atomized particulates, everyone in the work area must wear appropriate respiratory protection. Always wear a properly fitting respirator, which may include a supplied-air respirator. Ventilate the work area according to instructions in the fluid manufacturer's SDS.
- Avoid all skin contact with isocyanates. Everyone in the work area must wear chemically impermeable gloves, protective clothing and foot coverings as recommended by the fluid manufacturer and local regulatory authority. Follow all fluid manufacturer recommendations, including those regarding handling of contaminated clothing. After spraying, wash hands and face before eating or drinking.
- Hazard from exposure to isocyanates continues after spraying. Anyone without appropriate personal protective equipment must stay out of the work area during application and after application for the time period specified by the fluid manufacturer. Generally this time period is at least 24 hours.
- Warn others who may enter work area of hazard from exposure to isocyanates. Follow the recommendations of the fluid manufacturer and local regulatory authority. Posting a placard such as the following outside the work area is recommended:

WARNING

TOXIC FUMES HAZARD

DO NOT ENTER DURING SPRAY FOAM APPLICATION OR FOR ___ HOURS AFTER APPLICATION IS COMPLETE

DO NOT ENTER UNTIL:

DATE: _____

TIME: _____

For all applications except spray foam

Spraying or dispensing fluids that contain isocyanates creates potentially harmful mists, vapors, and atomized particulates.

- Read and understand the fluid manufacturer's warnings and Safety Data Sheet (SDS) to know specific hazards and precautions related to isocyanates.
- Use of isocyanates involves potentially hazardous procedures. Do not spray with this equipment unless you are trained, qualified, and have read and understood the information in this manual and in the fluid manufacturer's application instructions and SDS.
- Use of incorrectly maintained or mis-adjusted equipment may result in improperly cured material. Equipment must be carefully maintained and adjusted according to instructions in the manual.
- To prevent inhalation of isocyanate mists, vapors, and atomized particulates, everyone in the work area must wear appropriate respiratory protection. Always wear a properly fitting respirator, which may include a supplied-air respirator. Ventilate the work area according to instructions in the fluid manufacturer's SDS.
- Avoid all skin contact with isocyanates. Everyone in the work area must wear chemically impermeable gloves, protective clothing and foot coverings as recommended by the fluid manufacturer and local regulatory authority. Follow all fluid manufacturer recommendations, including those regarding handling of contaminated clothing. After spraying, wash hands and face before eating or drinking.

Material Self-ignition

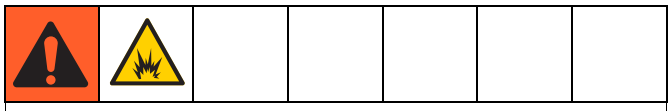

Some materials may become self-igniting if applied too thick. Read material manufacturer's warnings and Safety Data Sheet (SDS).

Keep Components A and B Separate

Cross-contamination can result in cured material in fluid lines which could cause serious injury or damage equipment. To prevent cross-contamination:

- **Never** interchange component A and component B wetted parts.
- Never use solvent on one side if it has been contaminated from the other side.

Moisture Sensitivity of Isocyanates

Exposure to moisture (such as humidity) will cause ISO to partially cure, forming small, hard, abrasive crystal that become suspended in the fluid. Eventually a film will form on the surface and the ISO will begin to gel, increasing in viscosity.

NOTICE

Partially cured ISO will reduce performance and the life of all wetted parts.

- Always use a sealed container with a desiccant dryer in the vent, or a nitrogen atmosphere. **Never** store ISO in an open container.
- Keep the ISO pump wet cup or reservoir (if installed) filled with appropriate lubricant. The lubricant creates a barrier between the ISO and the atmosphere.
- Use only moisture-proof hoses compatible with ISO.
- Never use reclaimed solvents, which may contain moisture. Always keep solvent containers closed when not in use.
- Always lubricate threaded parts with an appropriate lubricant when reassembling.

NOTE: The amount of film formation and rate of crystallization varies depending on the blend of ISO, the humidity, and the temperature.

Foam Resins with 245 fa Blowing Agents

Some foam blowing agents will froth at temperatures above 90°F (33°C) when not under pressure, especially if agitated. To reduce frothing, minimize preheating in a circulation system.

Changing Materials

NOTICE

Changing the material types used in your equipment requires special attention to avoid equipment damage and downtime.

- When changing materials, flush the equipment multiple times to ensure it is thoroughly clean.
- Always clean the fluid inlet strainers after flushing.
- Check with your material manufacturer for chemical compatibility.
- When changing between epoxies and urethanes or polyureas, disassemble and clean all fluid components and change hoses. Epoxies often have amines on the B (hardener) side. Polyureas often have amines on the B (resin) side.

Overall View

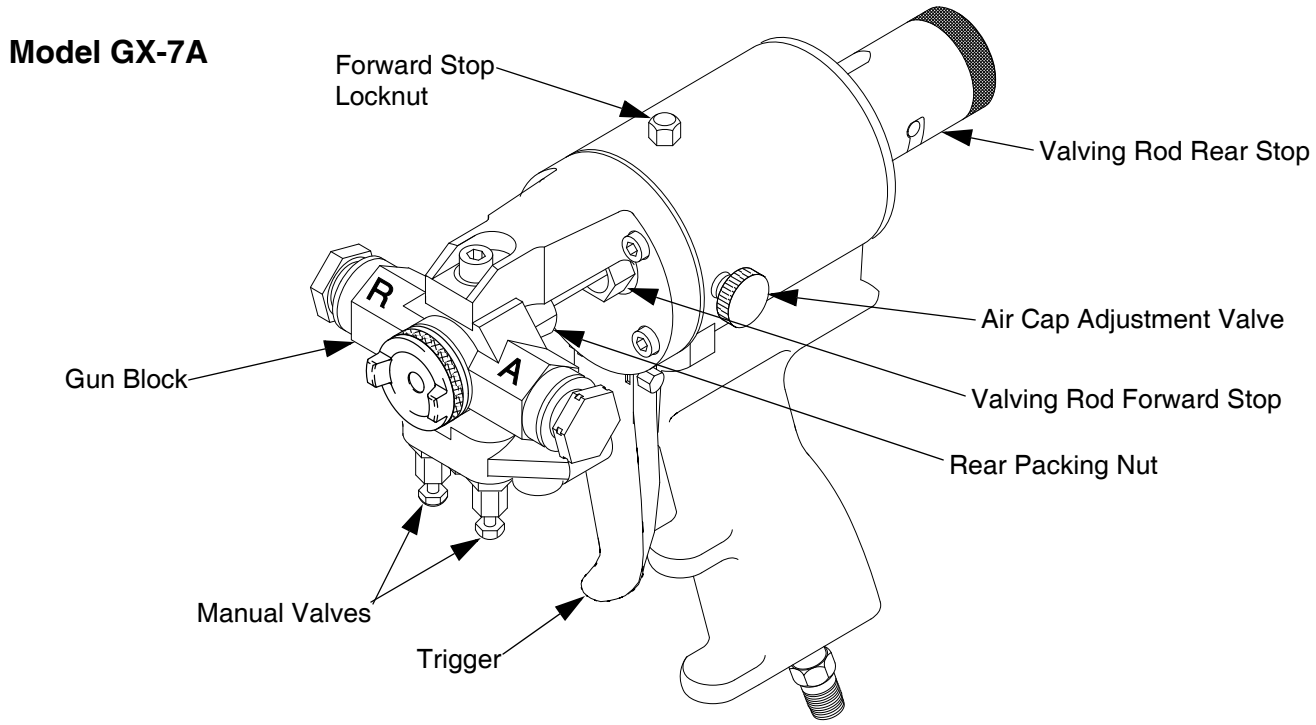

FIG. 1: GX-7A Overall View

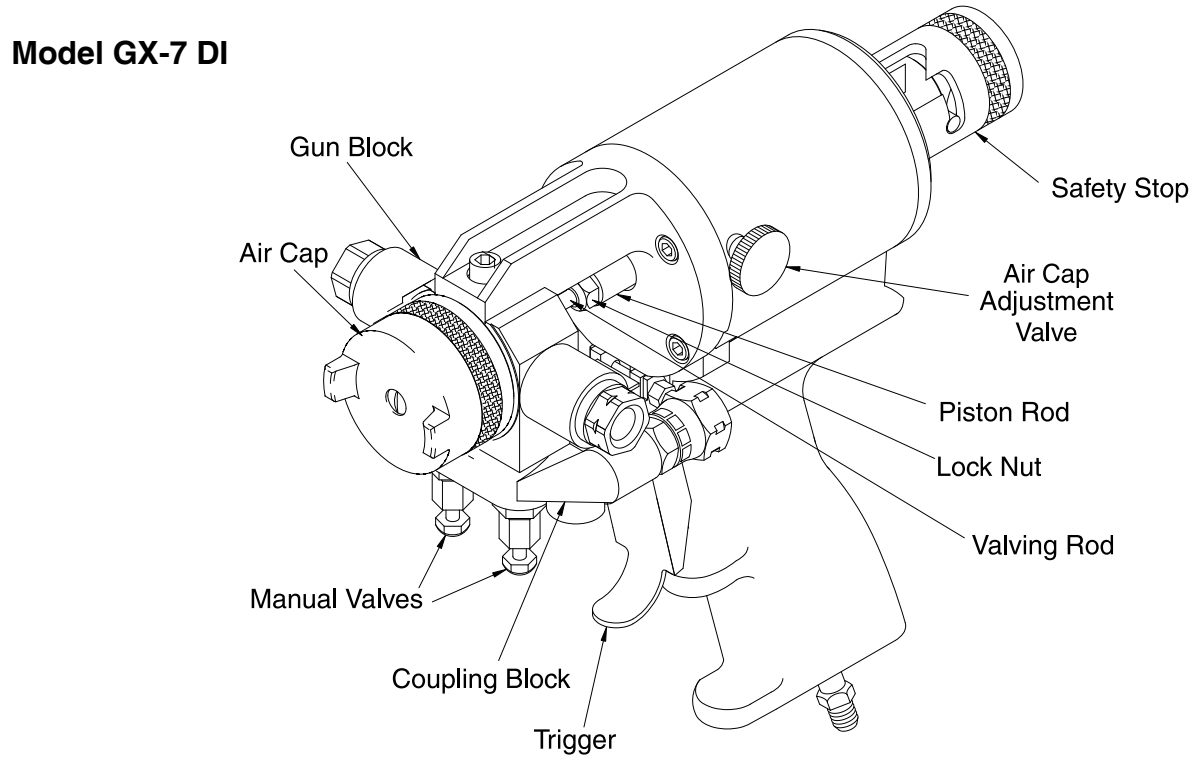

FIG. 2: GX-7 DI Overall View

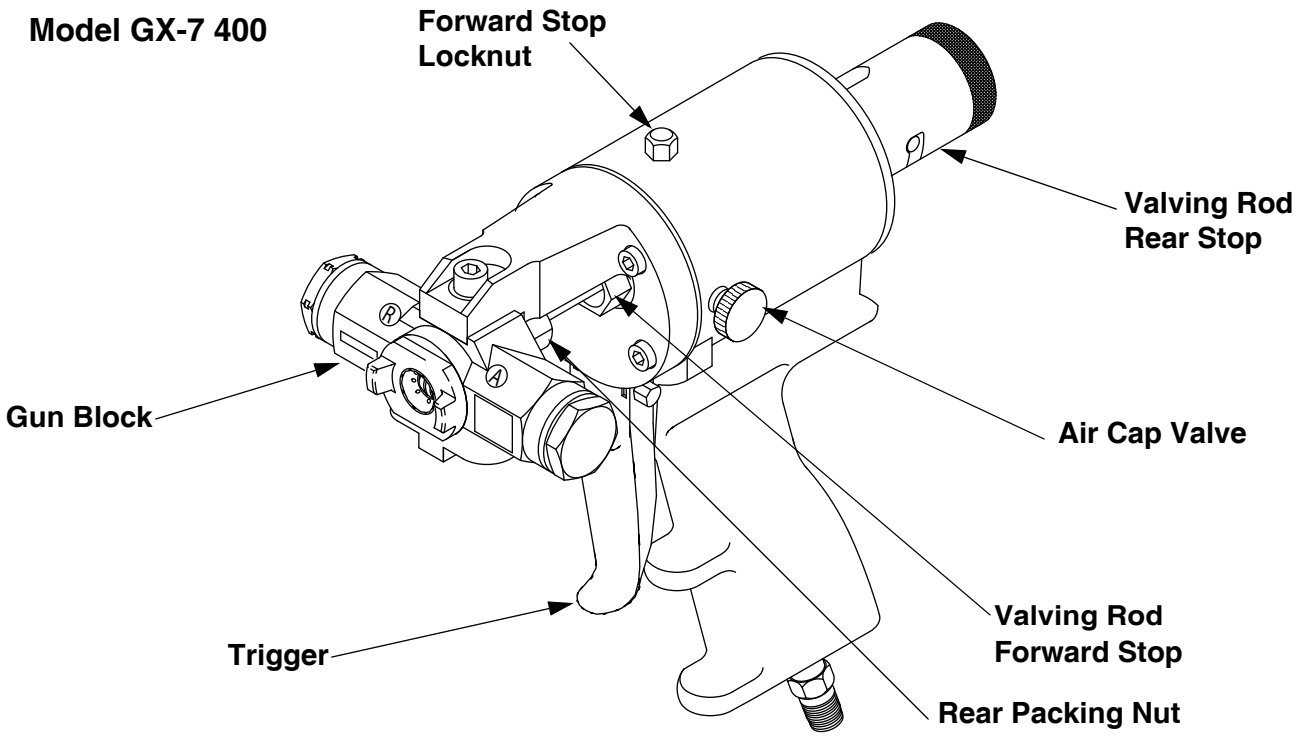

FIG. 3: GX-7 400 Overall View

Centerline Components

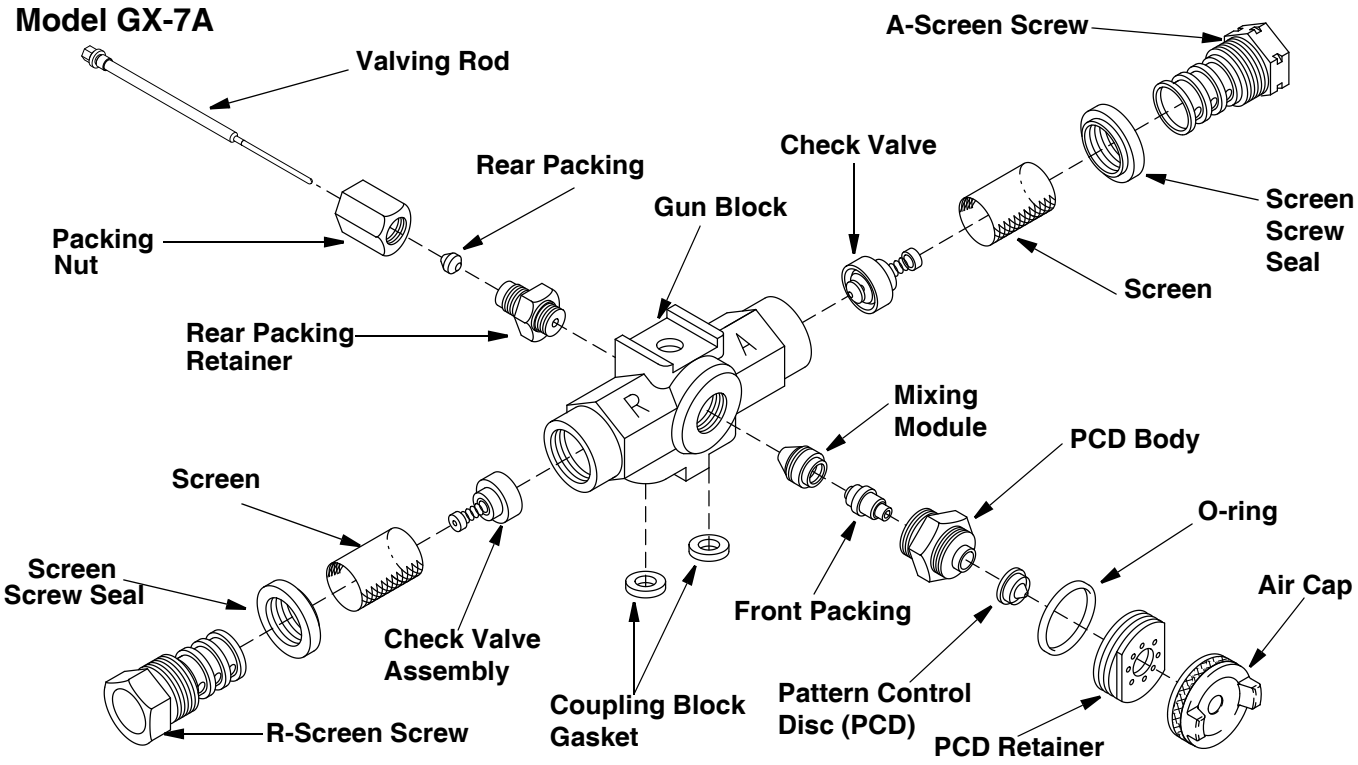

FIG. 4: GX-7A Centerline Components

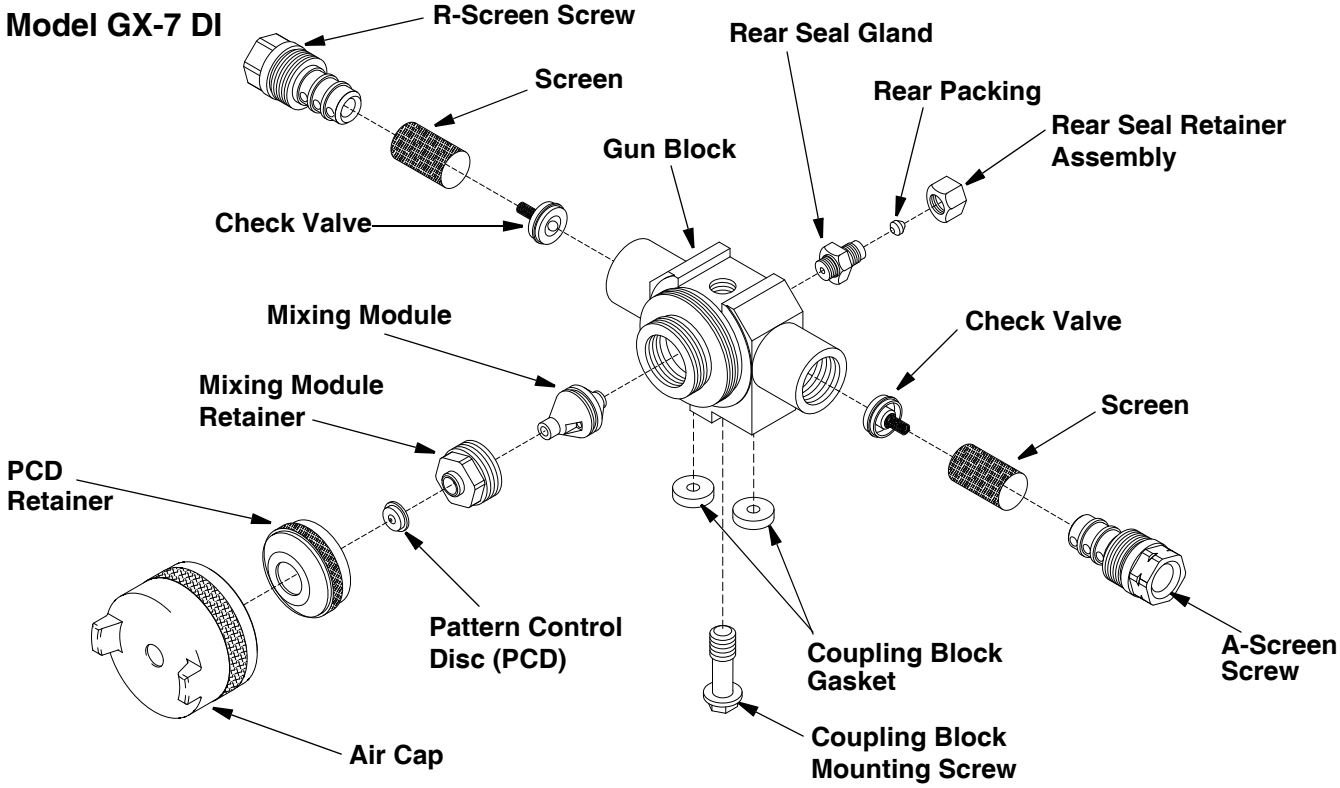

FIG. 5: GX-7 DI Centerline Components

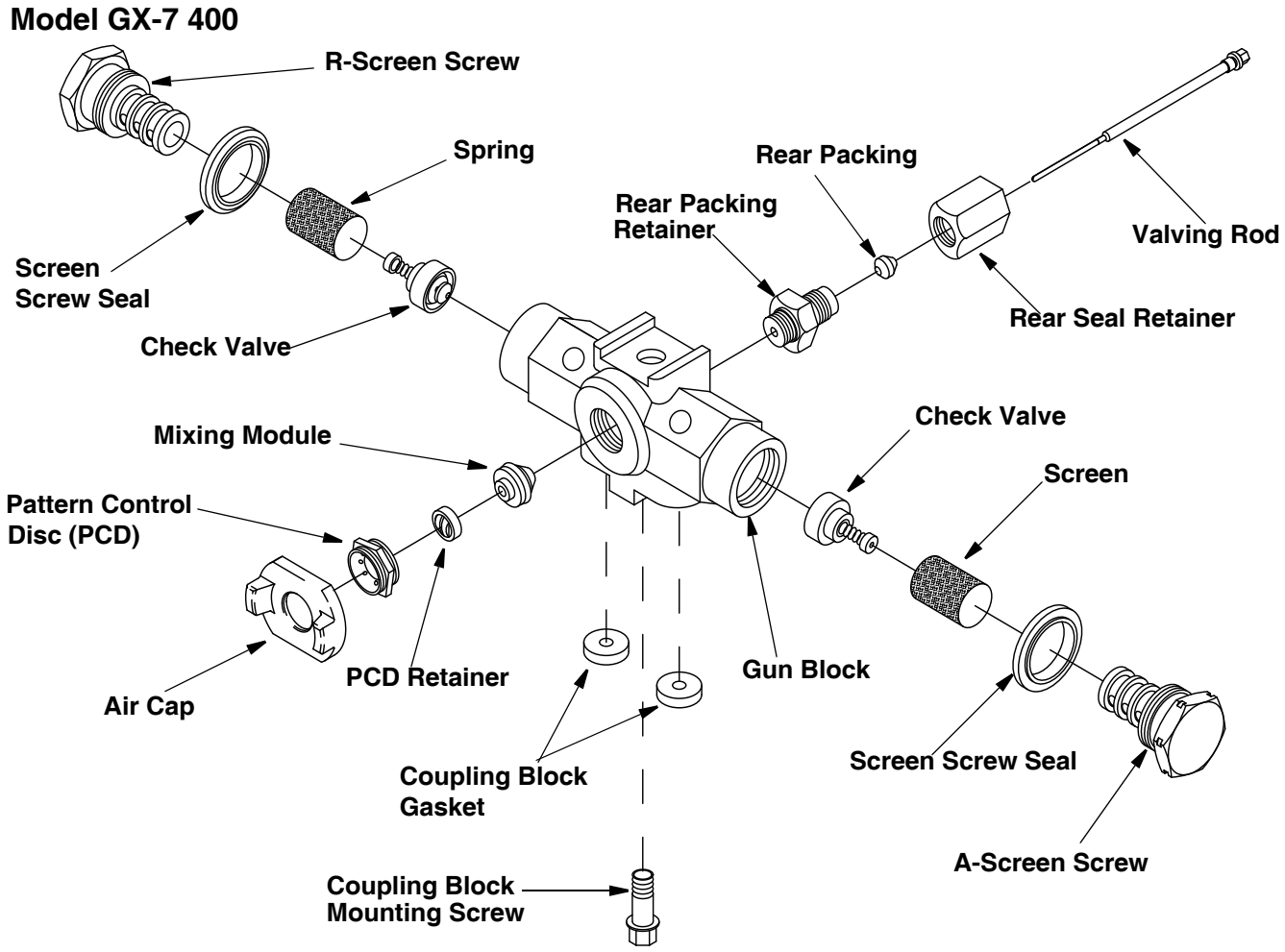

FIG. 6: GX-7 400 Centerline Components

Mixing Module

All gun models employ the concept of impingement mixing through the use of a single-part MIXING MODULE. This system is cleaned by a mechanical self-cleaning process, eliminating the need for solvent or air purging between dispenses.

The gun can be assembled with two styles of mixing components; their selection is dependent upon the type of system sprayed. The Set-Up Charts on pages 46 and 48 show several of the more common sets of these configurations.

The Mixing Module, in combination with a Pattern Control Disc (PCD), produce a thoroughly mixed chemical and reliable spray patterns. The module can be set up to spray at its maximum rated output. Additionally, by changing to a smaller PCD the module can spray at the low outputs and pressures that are required for detail work.

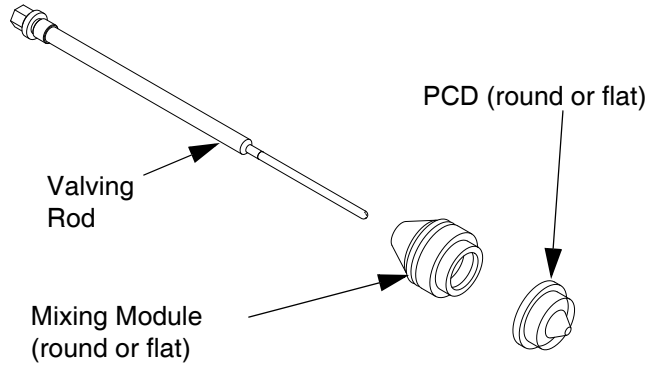

FIG. 7: GX-7A Mixing Module

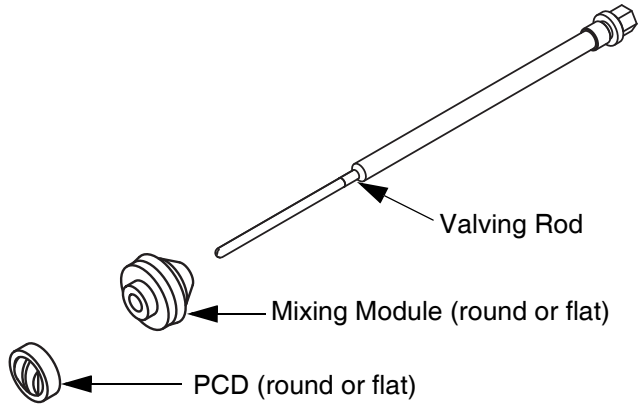

FIG. 8: GX-7 400 Mixing Module

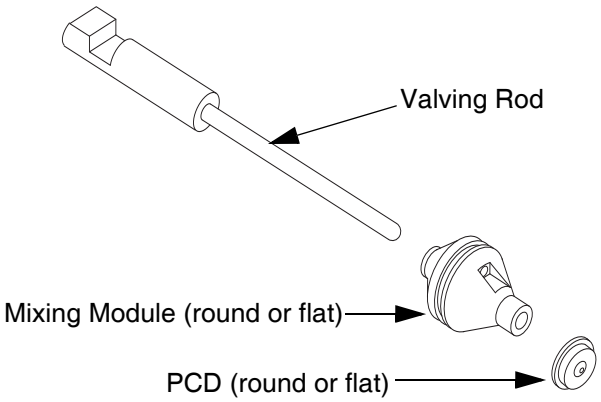

FIG. 9: GX-7 DI Mixing Module

Operation Basics

To prevent accidental gun operation, always disconnect air supply before servicing gun or anytime gun is not in use.

Isocyanate Hazard

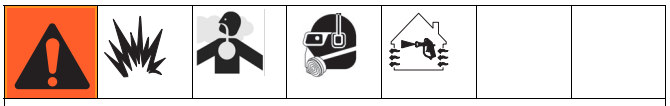

Spraying materials containing isocyanates creates potentially harmful mists, vapors, and atomized particulates.

Read material manufacturer's warnings and material MSDS to know specific hazards and precautions related to isocyanates.

Prevent inhalation of isocyanate mists, vapors, and atomized particulates by providing sufficient ventilation in the work area. If sufficient ventilation is not available, a supplied-air respirator is required for everyone in the work area.

To prevent contact with isocyanates, appropriate personal protective equipment, including chemically impermeable gloves, boots, aprons, and goggles, is also required for everyone in the work area.

Keep A and B Components Separate

CAUTION

To prevent cross-contamination of the gun's wetted parts, do not interchange A component (isocyanate) and B component (resin) parts. The gun is shipped with the A side on the left.

Grounding

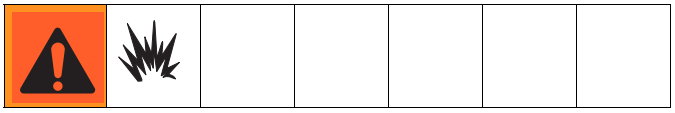

Check your local electrical code and proportioner manual for detailed grounding instructions.

Ground the spray gun through connection to a Graco-approved grounded fluid supply hose.

Safety Position

The guns have a two-position valving rod rear stop. The SERVICE position allows for minimal rearward travel of valving rod but will not allow chemical to discharge. The OPEN position allows full rearward travel of valving rod and permits gun to dispense. Whenever gun is not spraying, set to SERVICE position.

Engage Safety Stop

To engage safety stop, push in and turn safety stop clockwise to place gun in CLOSED (SERVICE) position.

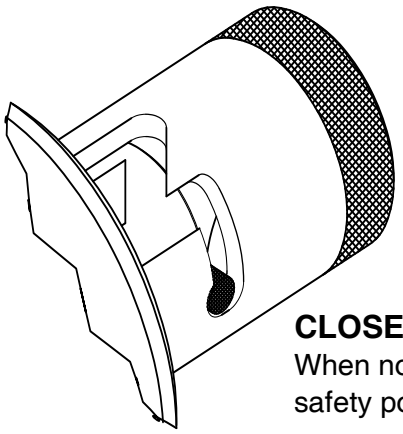

CLOSED (SERVICE)
When not spraying in safety position.

FIG. 10: Safety Stop - Closed

Disengage Safety Stop

To disengage safety stop, push in and turn safety stop counterclockwise to place gun in OPEN position (red band is exposed).

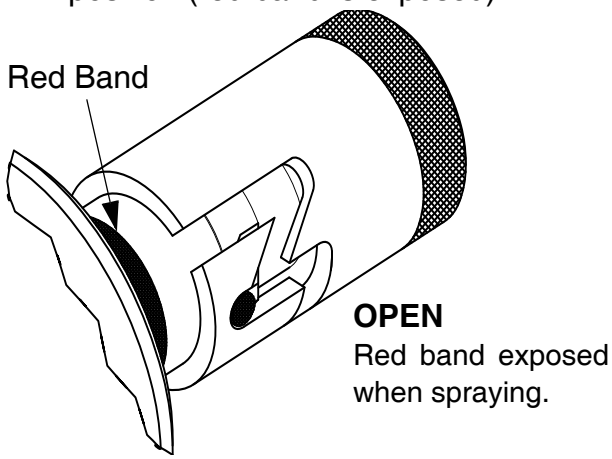

FIG. 11: Safety Stop - Open

Close Manual Valves

Closing manual valves prevents chemicals in heated hoses from entering gun. For your own safety, close manuals valves before servicing gun.

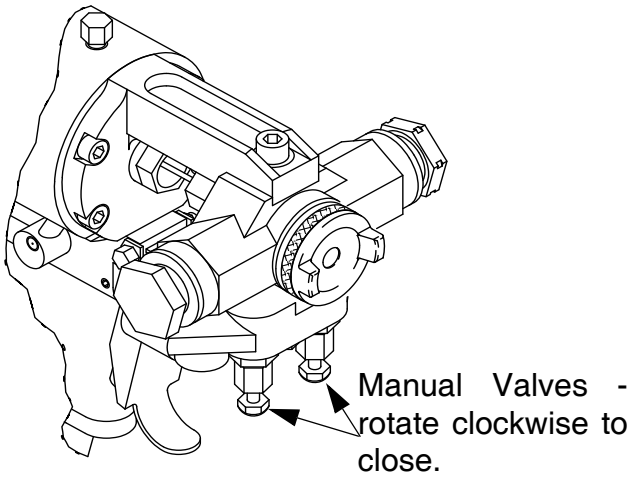

FIG. 12: Close Manual Valves

Air Hose Connection

Connect Air Hoses

Pull back sleeve of female fitting, insert male fitting and slide sleeve forward to secure connection.

Disconnect Air Hoses

Pull back sleeve of female fitting and pull out male fitting.

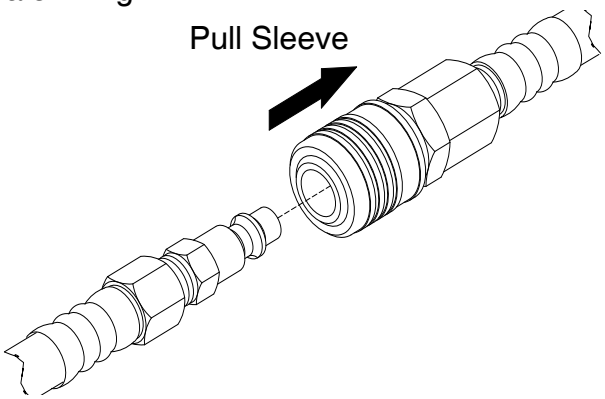

FIG. 13: Disconnect Air Hose

Coupling Block

Chemical hoses are joined to gun block by coupling block to ease installation and removal of gun.

Manual Valves

Two manual valves located on coupling block control flow of each chemical component to gun.

Triggering gun with manual valves closed may cause crossover if any residual chemical remains in gun ports.

Never open manual valve unless coupling block is secured to gun or unless you point gun into waste container.

Open Manual Valves

Use 5/16 in. nut driver to turn manual valve counterclockwise three full turns.

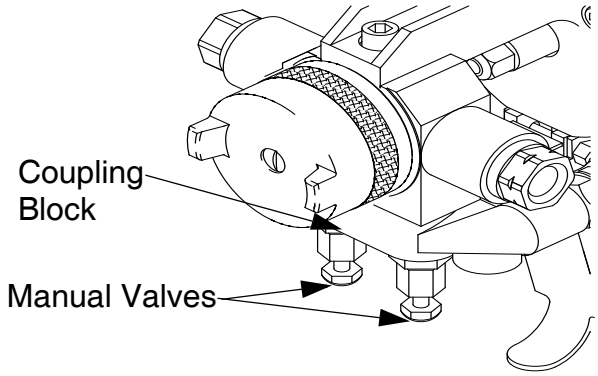

FIG. 14: Open Manual Valves

Close Manual Valves

Use 5/16 in. nut driver to turn manual valve fully clockwise.

CAUTION
To prevent accidental gun operation, always set safety stop to CLOSED (SERVICE), close both manual valves, and disconnect air supply.

Installation and Removal

To prevent release of pressurized chemicals, close both manual valves before removing coupling block.

Install Coupling Block

1. Replace nicked, damaged, or worn coupling block gaskets.
2. With gaskets in place, fit coupling block to gun block.

3. Insert coupling block mounting screw and use 5/16 in. nut driver to tighten to gun block.

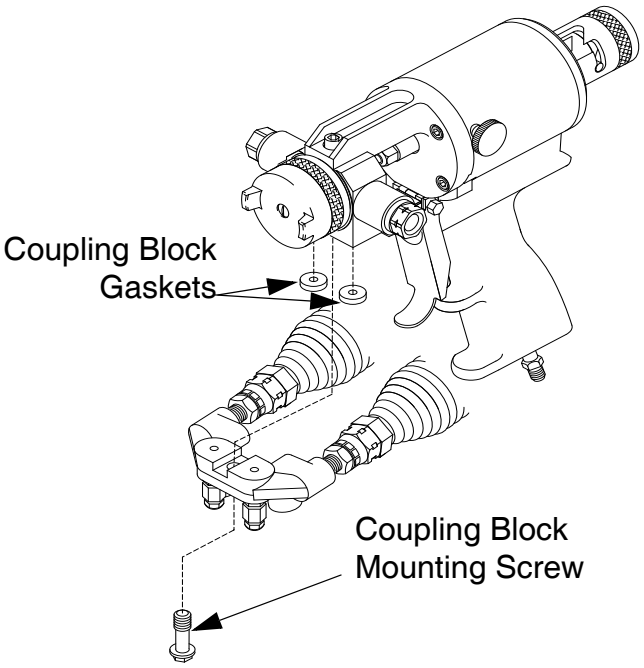

FIG. 15: Install Coupling Block

Remove Coupling Block

1. Set safety stop to CLOSED (SERVICE).
2. Disconnect air hose.
3. Close both manual valves.
4. Remove coupling block mounting screw.
5. Separate coupling block from gun.
6. Wipe mating surfaces of gun block and coupling block to remove residual chemical.
7. Cover exposed openings with grease.

Optional Configuration

Refer to page 44. If bottom-mount hose connection is desired, alternate swivel fitting (2 and 3) with pipe plugs (1). Use pipe thread sealant. Do not cross-over which side each fitting is on.

Air Inlet Configuration

There are two configurations for the air inlet. In the standard configuration the air inlet is at the base of the handle, and in the alternate configuration the air inlet is at the rear of the gun.

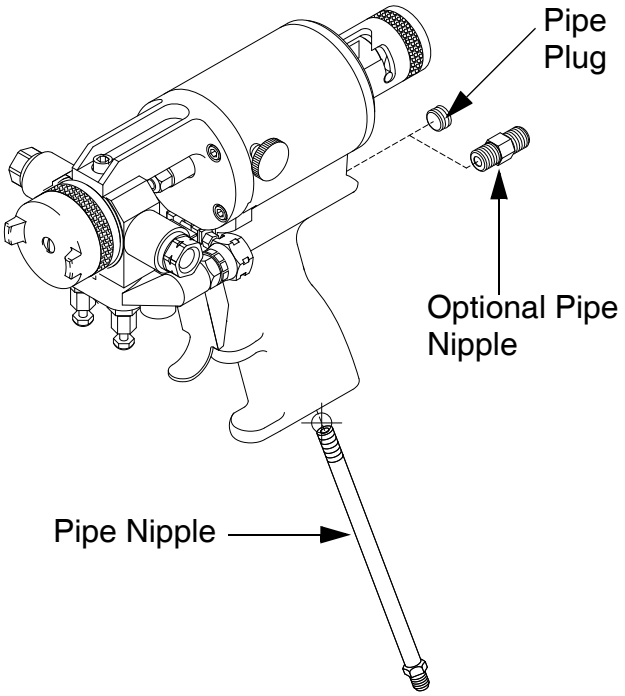

FIG. 16: Air Inlet Configuration

To change to alternate configuration,

1. Remove pipe nipple.
2. Remove pipe plug from rear of gun.
3. Install pipe plug in location previously occupied by pipe nipple.
4. Install pipe nipple in location previously occupied by pipe plug.

Mixing Module and PCD Installation

1. Install mixing module:
   a. Disconnect gun from coupling block.
   b. Connect air supply to gun.
   c. Set safety stop to OPEN.
   d. Hold down trigger and place module over tip of valving rod.
   e. Align keying pin with hole in gun block and push in firmly (GX-7 DI model only).
   f. Install front packing into module retainer (GX-7 model only).
   g. Install module retainer, hand tight. Release trigger.
   h. Use wrench to strongly tighten module retainer (250 in.-lbs.).
      GX-7 DI model only: use wrench to tighten module retainer (150 in.-lbs.). DO NOT OVERTIGHTEN.
2. Install PCD:
   a. Disconnect air supply from gun.
   b. Loosen forward stop screw (GX-7 model only).
   c. Turn forward stop nut clockwise (as viewed from front of gun) 1-2 turns (GX-7 model only).
   d. Slightly loosen rear seal retainer assembly.
   e. Remove safety stop.
   f. Use wrench to loosen piston locknut. Turn valving rod rearward as far as it will turn.
   g. Place and orient PCD over mixing module retainer.
   h. Install PCD retainer and hand tighten (GX-7 DI model only).
   i. Install PCD retainer and wrench tighten (GX-7 model only).
3. Adjust valving rod. See procedure for appropriate gun model.
4. Set safety stop to OPEN position.
5. Check adjustment of valving rod:
   a. With air supply connected, hold down gun trigger and loosen PCD retainer. Release trigger.
   b. Hand tighten PCD retainer.
   c. While maintaining tightening torque, trigger gun. Retainer should rotate approximately 1/10 of turn.
   d. Release trigger.

Valving Rod Adjustment

GX-7A and GX-7 400 Models Only

1. Push in rear stop to SERVICE position.
2. If attached, turn both manual valves fully clockwise to close (see **Manual Valves**, page 15).
3. Connect air line from gun to air source to pressurize air cylinder forward to CLOSED position.
4. Loosen forward stop locknut.

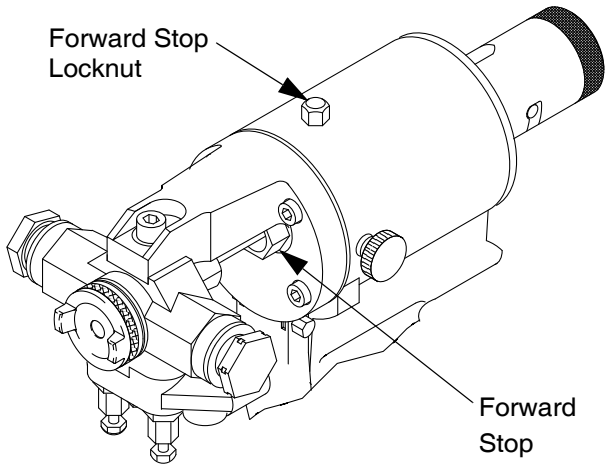

FIG. 17: Forward Stop

5. Completely loosen (full CCW) forward stop. Then slowly tighten (CW) forward stop until a snug resistance is felt. From this point, reverse and loosen approximately 1/6 of a turn.
6. Tighten forward stop locknut. Do not over-tighten. If locknut bottoms out before resistance is felt, replace friction plug.

As a reference point, movement of one wrench flat corresponds to 1/6 turn.

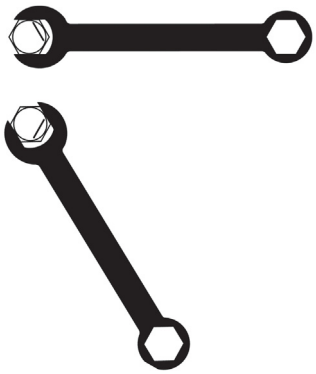

FIG. 18: One Wrench Flat

Valving Rod Adjustment

GX-7 DI Model Only

Valving rod requires adjustment in only the following instances:

- disassembly and service of air cylinder
- changing valving rod
- changing mixing module

1. Clean gun according to **Clean Spray Gun Procedure**, page 22.
2. Connect air supply to gun.
3. Loosen rear seal retainer assembly one or two turns.
4. Loosen locknut from valving rod three or four turns.
5. Set safety stop to OPEN.
6. Use 5/16 in. nut driver through rear of gun to thread valving rod forward to engage PCD. When valving rod contacts PCD tighten another 1/10 turn.
7. Carefully maintain position of valving rod and tighten locknut against piston rod.
8. Retighten rear seal retainer assembly.

Initial Set Up

1. Install female quick disconnect fitting to air supply hose bundled with chemical supply hoses.
2. Connect coupling block to hose bundle. Connect A-Isocyanate hose (red-tape) to notched fitting on coupling block. Connect R-Resin hose (blue-tape) to fitting without notches on coupling block.
3. Close both manual valves.
4. Pressurize A and R chemical hoses. Check for leaks. See Proportioner manual.
5. Bleed air from chemical hoses.
   a. Use separate waste containers for A-ISO and R-Resin.
   b. Hold coupling block with exit ports pointed into waste container.
   c. Open one manual valve at a time to dispense into waste container.
   d. Bleed each side until chemical leaving hoses is free of air.
   e. Close both manual valves.
6. Use cloth soaked in gun cleaner to clean coupling block and mating surfaces.
7. Set safety stop to CLOSED (SERVICE).
8. Install coupling block to gun.
9. Proceed with daily start-up and shutdown procedures.

Daily Start-up

Ensure gun is attached to coupling block and air hose. Ensure proportioning unit is at desired temperature and pressure. Properly ground equipment to avoid static sparking that may result in fire or explosion.

1. Connect air supply to gun.
2. Adjust air cap adjustment valve. Turn knob counterclockwise to open valve and clockwise to close valve
3. Adjust rear seal retainer.
4. Open both manual valves. See **Coupling Block** section, page 15.
5. Set safety stop to OPEN.
6. Test spray on disposable surface.

Daily Shutdown

Follow daily shutdown procedure when gun is out of service for any length of time, or for mid- or end-of-day service. See **Clean Spray Gun Procedure**, page 22.

1. Set safety stop to OPEN.
2. Close both manual valves.
3. Disconnect air supply from gun.
4. Shutdown proportioning unit as required. See Proportioner manual.
5. Clean as required. See **Clean Spray Gun Procedure**, page 22.

Do not disassemble gun daily for cleaning if it is operating properly. However, if gun is removed from coupling block, it must be flushed and cleaned thoroughly.

Pressure Relief Procedure

Relieve pressure before cleaning or repairing gun.

1. Close both manual valves.

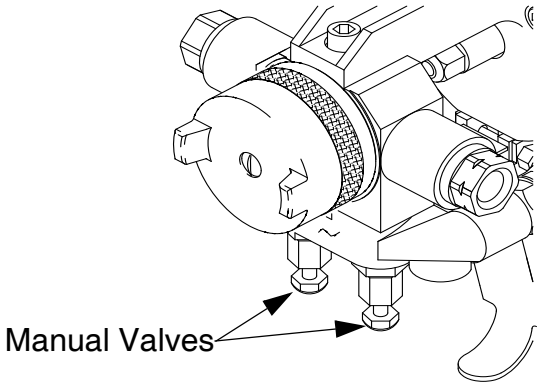

FIG. 19: Close Manual Valves

2. Set safety stop to OPEN.
3. Trigger gun onto cardboard or into waste container to relieve pressure.

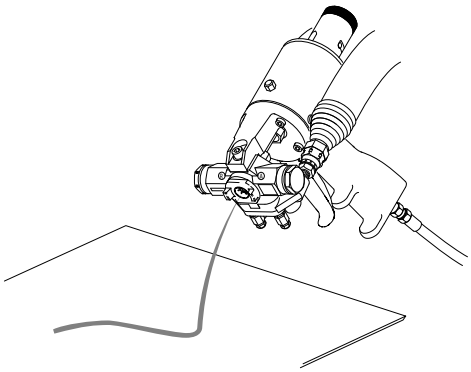

FIG. 20: Trigger Gun

4. Release gun trigger, set safety stop to CLOSED, and close manual valves.

If fluid in hose and proportioner is still under pressure, follow Pressure Relief Procedure in proportioner manual

To relieve pressure in hose after gun is removed, place fluid manifold over containers, facing away from you. Very carefully open fluid valves. Under high pressure, fluid will spray sideways from fluid ports. See FIG. 21.

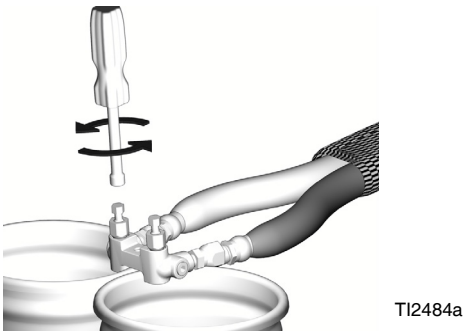

FIG. 21: Open Manual Valves

Maintenance

Use supplied tool kit 296835. See **Tool Kit**, page 50.

Gun Service Kits

Use either the 1-Quart Gun Service Kit (296980) or 3-Gallon Gun Service Kit (296981) to perform daily flushing of spray gun without disassembly.

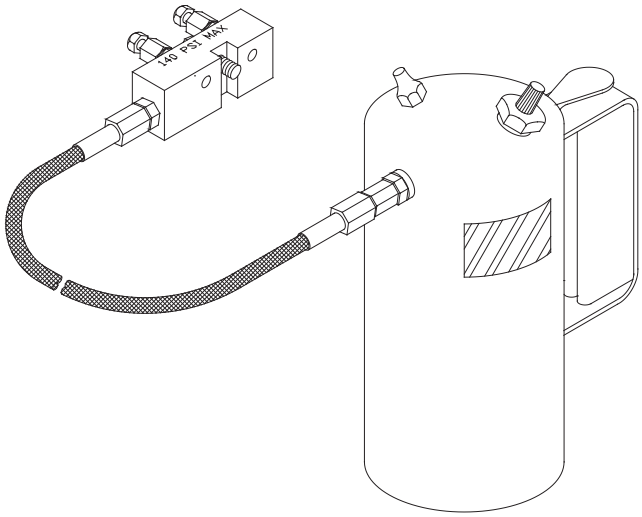

FIG. 22: 1-Quart Gun Service Kit
For more information about the 1-Quart Gun Service Kit, see Manual 311340.

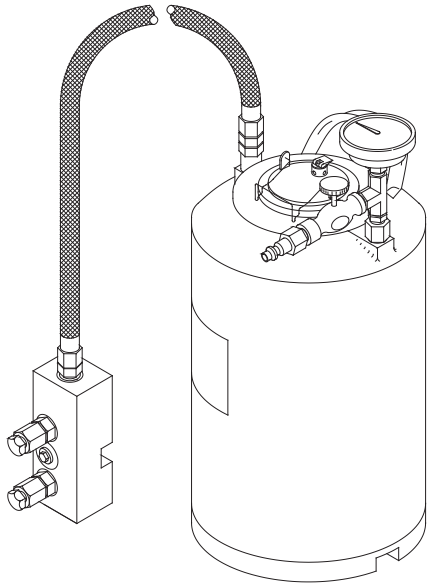

FIG. 23: 3-Gallon Gun Service Kit
For more information about the 3-Gallon Gun Service Kit, see Manual 311341.

Clean Spray Gun Procedure

To avoid static sparking that may result in fire or explosion, ensure all equipment in cleaning procedure is grounded. Do not clean on or near foamed or coated surfaces or any other flammable surfaces or objects.

Thoroughly flush gun block with gun cleaner before removing valving rod or mixing components from gun block. Also allow chemicals in spray gun to cool before cleaning.

This procedures makes use of the 1-Quart or 3-Gallon Gun Service Kit.

1. Set safety stop to CLOSED (SERVICE).
2. Close both manual valves.

3. Remove gun from coupling block.
4. Attach service block of gun service kit to spray gun, and then tighten using 5/16 in. nut driver.
5. Pressurize Service Kit container up to 100 psi. DO NOT EXCEED 100 psi (0.7 MPa, 7 bar).
6. Open one manual valve on service block.
7. Connect air to gun. Set safety stop to OPEN.
8. Hold gun against grounded waste container.
9. Trigger gun and 1-Quart Gun Service Kit. Spray into waste container until there is a fine, unobstructed mist of gun cleaner.
10. Release both triggers and close manual valve on service block.
11. Repeat steps 5-7 for other side of gun.
12. After initial cleaning, remove air cap, PCD retainer, and PCD. Flush a second time to ensure thorough cleaning.
13. Remove service block of gun service kit from spray gun.
14. Set safety to CLOSED (SERVICE).
15. Disconnect air supply.
16. Clean screens, check valves and screen screw as required. See **Service Screen Screw**, page 24.

Inspect air cap, PCD, mixing module, and gun block for build up of material and clean as required.

Do not use metal cleaning devices to clean plastic components.

Flush Gun

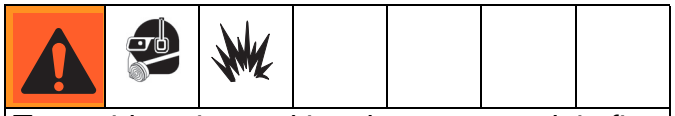

To avoid static sparking that may result in fire or explosion, ensure all equipment in flushing procedure is grounded. Do not flush on or near foamed or coated surfaces.

1. Set safety stop to CLOSED (SERVICE).
2. Close both manual valves.
3. Loosen R-Screen screw and then remove by hand.
4. Use flush can to thoroughly flush screen screw and screen screw cavity.
5. Loosen A-Screen screw and then remove by hand.
6. Use flush can to thoroughly flush screen screw and screen screw cavity.
7. Service gun by following **Maintenance** procedures, page 22.

Repair

Shutdown proportioner and allow chemicals to cool before servicing gun.

Clean A and R components in separate containers to avoid cross contamination.

Service Screen Screw

1. Flush gun according to **Clean Spray Gun Procedure**, page 22.
2. Unthread screen screw from gun block.
3. Remove check valve from screen screw. Clean valve with gun cleaner and inspect for damage. Replace if necessary.
4. Remove screen from screen screw. Soak in gun cleaner or replace if clogged or dirty.
5. Clean screen screw cavity. If **any** particles are visible, clean with clean out drills and flush with gun cleaner.

CAUTION
Any material left in cavity on downstream side of screen will clog mixing module.

6. Inspect screen screw seal for damage. Replace if necessary.
7. Reinstall screen screw in gun block. Make sure it is tight.
8. Flush gun with mixing module removed.

Remove Centerline Components

Refer to FIG. 4 through FIG. 6 for diagrams of centerline components for all gun models.

1. Flush gun according to **Clean Spray Gun Procedure**, page 22.
2. Connect air supply to gun. Set safety stop to OPEN.
3. Remove air cap.
4. Trigger gun and hold it to relieve pressure on PCD retainer.
5. Remove PCD retainer by turning it counterclockwise.
6. Remove PCD from mixing module retainer.

To remove PCD that is stuck, set safety stop to OPEN, depress and release gun trigger to unseat it. Set safety stop to CLOSED (SERVICE).

7. Remove mixing module retainer.
8. Set safety stop to OPEN. Depress and release gun trigger to unseat it. Remove mixing module off end of valving rod. Set safety stop to CLOSED (SERVICE).

CAUTION
Do not use sharp objects or metal tools to remove mixing module.

9. Loosen rear packing nut 1-2 turns.
10. Push safety stop partially forward, rotate it counterclockwise, and slide off air cylinder.

11. Remove valving rod.

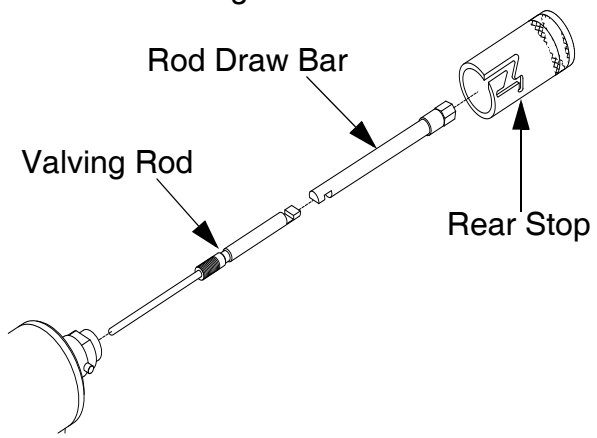

FIG. 24: Remove Valving Rod (GX-7 DI model)

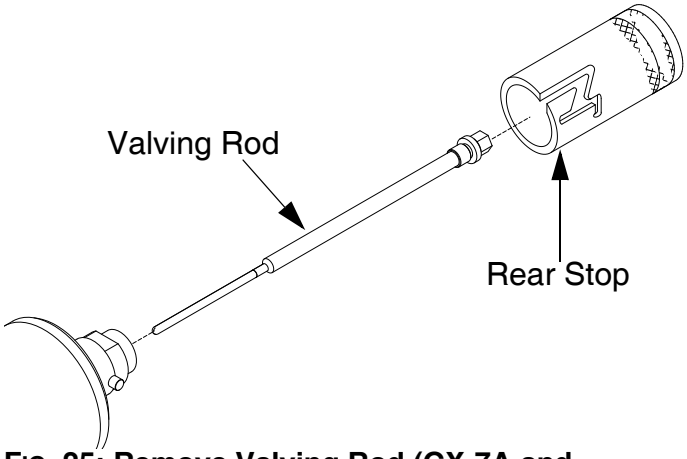

FIG. 25: Remove Valving Rod (GX-7A and GX-7 400 models)

a. Depress trigger lever and hold. *GX-7 DI model only:* loosen piston stop locknut until it disengages from thread on valving rod.

b. Use 5/16 in. nut driver to unthread valving rod from rear of gun.

c. When threads disengage remove assembly by hand.

12. Inspect valving rod for damage and replace as required. Clean and remove any buildup of mixed material from rod using cloth soaked in gun cleaner or fine steel wool.

If valving rod is replaced, it is recommended to reset forward stop.

13. Disconnect air supply.

14. Remove gun block retaining screw. Carefully slide gun block away from air cylinder. If dried chemical is built up on gun block, remove dried chemical before you remove gun block.

15. Clean all components thoroughly. Use brushes and clean-out tools to remove residual chemical from metal components. Use cotton swabs soaked in gun cleaner to clean plastic components.

16. Coat threads and mating surfaces of gun block and gun block bracket with Lubriplate grease, and reassemble.

17. Inspect gun block for damage.

Install Centerline Components

GX-7 DI Model Only

Before installation, ensure all gun components are clean and dry. Lubricate all moving parts and threads.

1. Install rear packing gland with packing wrench. Tighten onto gun block.
2. Install rear packing retainer loosely.
3. Install valving rod. Use 5/16 in. nut driver to thread assembly tight into end cap.
   GX-7 DI model only: thread rod until approximately 3/16 in. to 1/4 in.of thread protrudes from end of piston rod.
4. Thread locknut onto valving rod by hand.
5. Carefully slide gun block onto valving rod toward air cylinder. Install gun block onto gun block mounting bracket.
6. Install safety stop; leave in OPEN position.
7. Connect air supply to gun.
8. Depress gun trigger and slide mixing module over end of valving rod.
   GX-7 DI model only: ensure valving rod alignment pin enters alignment slot in gun block.
   Keep gun trigger depressed.
9. With gun trigger depressed, thread mixing module retainer or PCD body with packing installed, by hand, and then wrench tighten.

CAUTION
To avoid damage to module and gun block, do not over-tighten mixing module retainer.

10. Release gun trigger.
11. Install PCD over end of mixing module retainer.
12. Thread PCD retainer onto gun block. Hand tight.
13. Rotate flat PCD to adjust orientation as required.
14. Adjust valving rod. See **Valving Rod Adjustment**, page 18.
15. Thread air cap into place; hand tight.
16. Slide safety stop onto rear of air cylinder. Push safety stop partially forward and rotate clockwise to set to OPEN.
17. Set safety stop to CLOSED (SERVICE).

Replace End Cap and Air Piston Assembly

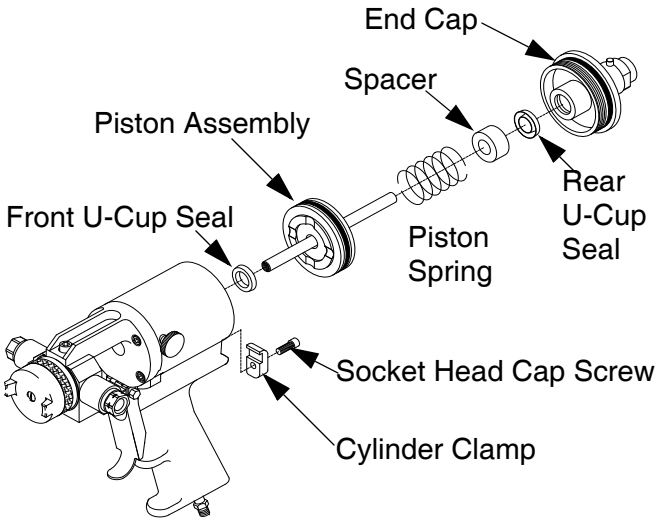

GX-7 DI Shown

FIG. 26: GX-7 DI End Cap and Air Piston Assembly

1. Clean gun according to **Clean Spray Gun Procedure**, page 22.
2. Loosen rear packing nut 1-2 turns.
3. Push safety stop partially forward, rotate counterclockwise, and slide safety stop off air cylinder.
4. Remove valving rod. See **Remove Centerline Components**, page 24.
5. Disconnect air supply from gun.
6. Remove rear head cap screw and cylinder clamp from handle.
7. Remove end cap from air cylinder.
8. Inspect end cap o-ring. Replace if damaged. Install new end cap o-ring after lightly coating it with Lubriplate grease.
9. Inspect rear U-cup seal or o-ring for damage. Replace if necessary. If removed, ensure “cup” faces front of air cylinder when replacing.
10. By hand, pull piston assembly out of air cylinder and inspect o-ring for damage. Replace if necessary. Apply Lubriplate grease prior to installation.
11. If air was escaping around piston rod during operation, replace front u-cup seal or o-ring. Apply Lubriplate grease and ensure “cup” faces rear of air cylinder.
12. Insert piston and rod assembly into air cylinder. Take care to not damage front cup seal as rod passes through.
13. Insert piston spring. (For GX-7 DI models, also insert piston spacer.)
14. Reinstall end cap into air cylinder.
15. Retighten rear socket head cap screw and cylinder clamp to handle.
16. Reinstall valving rod. Connect valving rod to draw bar. Lubricate and thread into end cap.
17. Adjust valving rod; see **Valving Rod Adjustment**, page 18.
18. Slide safety stop onto rear of air cylinder. Push safety stop partially forward and rotate clockwise to set to OPEN.
19. Set safety stop to CLOSED (SERVICE).
20. Tighten rear packing nut.

Replace Trigger Valve O-Rings

1. Clean gun according to **Clean Spray Gun Procedure**, page 22.

2. Disconnect air supply from gun.

Refer to **Parts**, page 32.

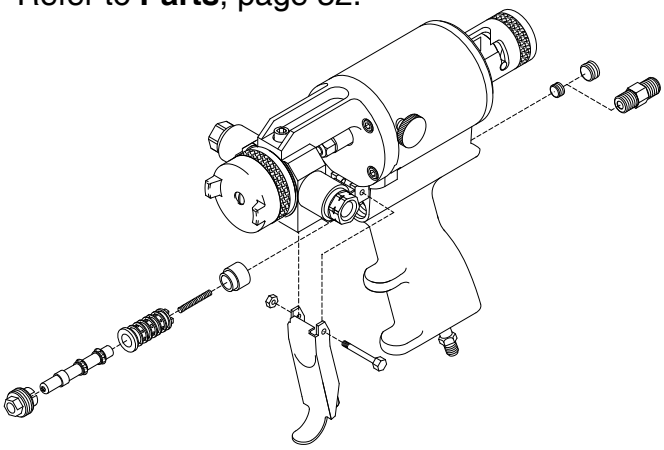

FIG. 27: Replace Trigger Valve O-Ring

3. Remove mounting screw and locknut that hold trigger in place. Remove trigger.

4. Remove valve retainer nut.

5. Pull out valve spool and valve spring. Remove old o-rings.

6. Prior to installation, liberally lubricate all o-rings with lubricant provided in Rebuild kit.

Follow steps 7-15 to replace o-rings on valve liner. If o-rings do not need to be replaced, go to step 16.

7. Remove pipe plug from rear of gun handle.

For guns configured with air inlet at rear of gun handle, pipe nipple replaces pipe plug. Remove pipe nipple.

8. Remove rear internal pipe plug (under pipe plug).

9. Use pin punch and hammer to gently tap spring seat until it and valve liner push out opposite end of hole.

10. Remove 4 o-rings on liner.

11. Apply thick coat of Lubriplate grease to new o-rings and install.

12. Clean valve hole. Remove any dirt and debris. Apply thick coat of Lubriplate grease to inside of valve hole.

13. Slide spring seat into gun handle air valve hole, tapered end first, until it bottoms out.

14. Push valve liner in as far as it will go. Temporarily screw in valve retainer nut, which aligns valve liner and valve spool. Remove valve retainer nut.

15. With valve spool spring in place, insert valve spool into valve liner. Screw in valve retainer nut. Do not overtighten.

16. Apply small amount of pipe thread sealant to 1/16 in. pipe plug threads. Screw pipe plug in place.

17. Apply small amount of pipe thread sealant to 1/8 in. pipe plug (or 1/8 in. pipe nipple) and install.

18. Reinstall trigger using screw and locknut.

Clean Mixing Module

1. Flush gun according to **Clean Spray Gun Procedure**, page 22.

2. Connect air supply to gun. Set safety stop to OPEN.

3. Remove air cap by hand.

GX-7A and GX-7 400 Models Only
Air cap and PCD retainer may be difficult to separate during disassembly due to overtightening or hardened mixed material. Fit the side of the stamped 5/8 in. wrench into the groove to separate. When reinstalling, apply lubricant to threads.

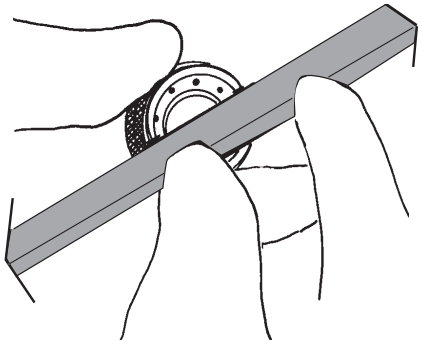

FIG. 28: Unthread Cap from PCD Body

4. Trigger gun and hold it to relieve pressure on PCD retainer.

5. Remove PCD retainer by turning it counter-clockwise.

6. Remove PCD from mixing module retainer.

To remove PCD that is stuck, set safety stop to OPEN, depress and release gun trigger to unseat it. Set safety stop to CLOSED (SERVICE).

7. Remove mixing module retainer.

8. Set safety stop to OPEN. Depress and release gun trigger to unseat it. Remove mixing module from end of valving rod. Set safety stop to CLOSED (SERVICE).

9. Inspect valving rod for damage and replace as required. Use cloth soaked in gun cleaner or steel wool to clean and remove buildup of mixed material from rod.

If the valving rod is replaced, reset forward stop.

10. Clean mixing module.

Ensure cleanout tool size matches module size used. See the Set-Up Charts on pages 46 and 48.

   a. Insert cleanout tool into pin vise.

   b. Use cleanout tool to clean module ports. Take care not to insert tool too far causing damage to inside bore of module. Use cotton swab soaked in gun cleaner to clean bore of module.

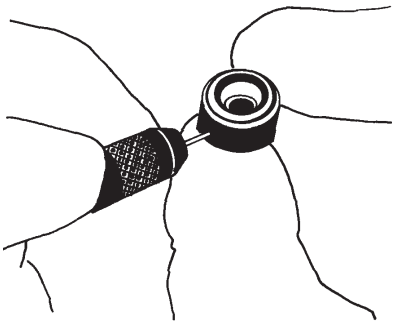

FIG. 29: Clean Module Ports

Install Mixing Module

1. Install safety stop; leave in OPEN position.

2. Connect air supply to gun.

3. Depress gun trigger and slide mixing module over end of valving rod.
   GX-7 DI model only: ensure valving rod alignment pin enters alignment slot in gun block.
   Keep gun trigger depressed.

4. With gun trigger depressed, thread mixing module retainer or PCD body with packing installed, by hand, and then wrench tighten.

CAUTION
To avoid damage to module and gun block, do not overtighten mixing module retainer.

5. Release gun trigger.

6. Install PCD over end of mixing module retainer.

7. Thread PCD retainer onto gun block. Hand tight.

8. Rotate flat PCD to adjust orientation as required.

9. Adjust valving rod. See **Valving Rod Adjustment**, page 18.

10. Thread air cap into place; hand tight.

11. Slide safety stop onto rear of air cylinder. Push safety stop partially forward and rotate clockwise to set to OPEN.

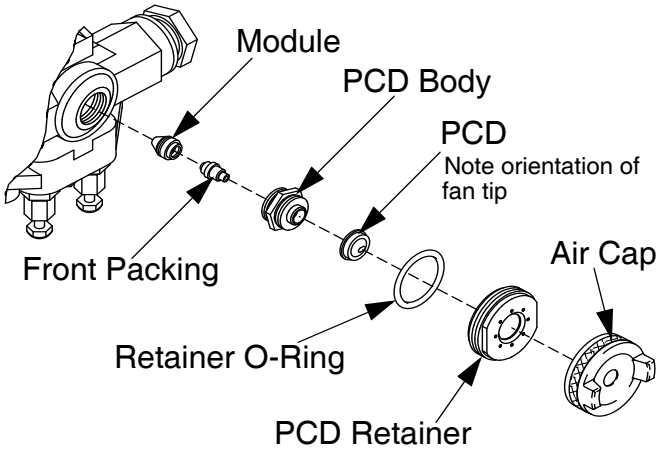

FIG. 30: Install Mixing Module

Clean Pattern Control Disc

1. Set safety stop to CLOSED (SERVICE).
2. Close both manual valves.
3. Turn off air to air cap.
4. Use cotton swab soaked in gun cleaner to clean external surface of material build up. Light scrubbing with impinger cleanout brush may also be required.
   a. Trigger gun to SERVICE position and clean orifice area.

It is not always possible to clean all material build-up from PCD while assembled to gun. In this case, remove PCD and clean inside radius of disc.

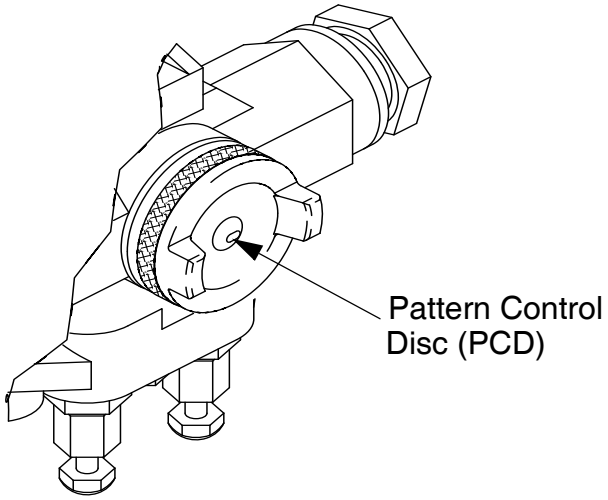

GX-7A Model Shown

FIG. 31: Pattern Control Disc (PCD)

Parts

GX-7A Model Final Assembly

Part Numbers 295542, 295543, 295544, 295545

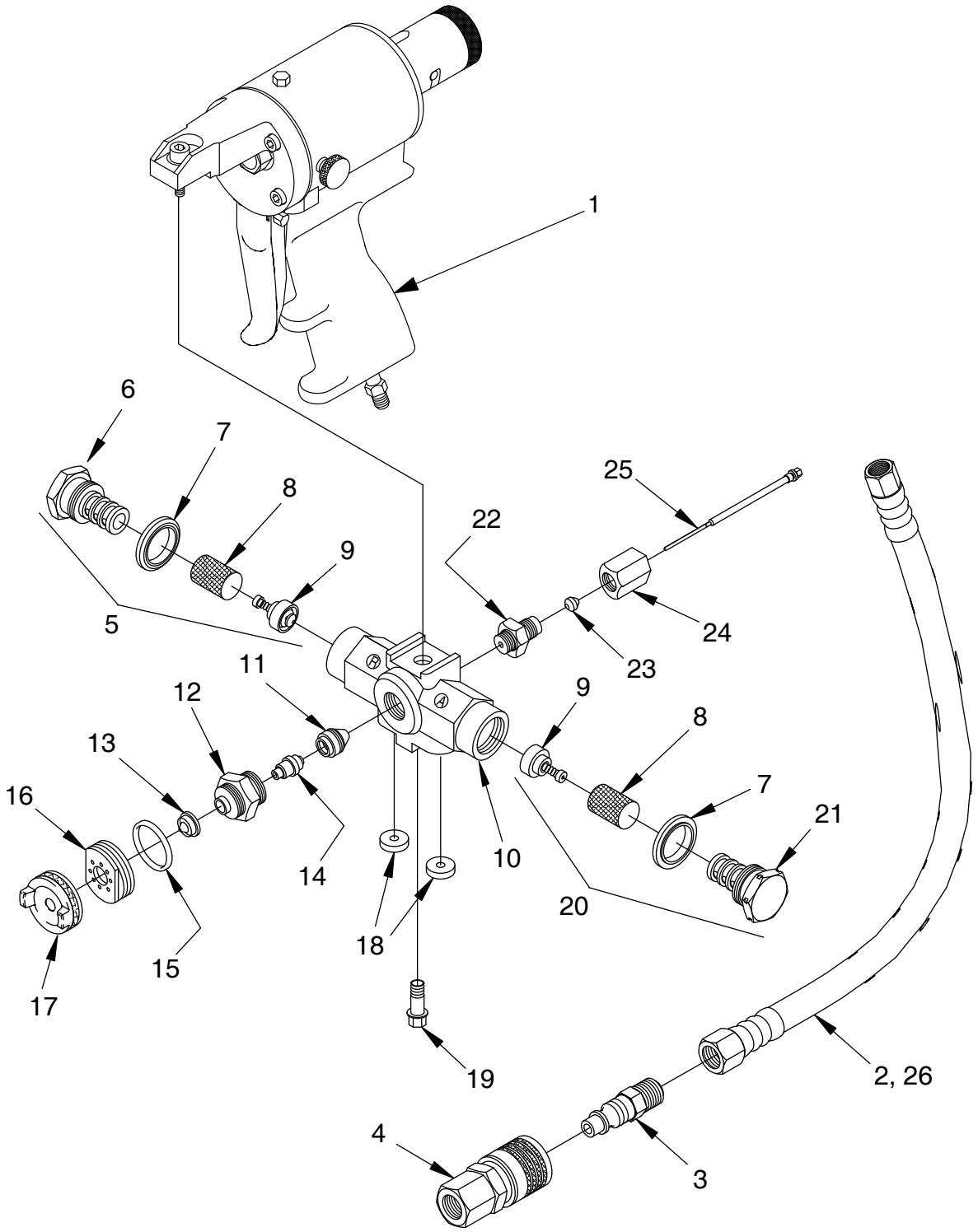

GX-7A Model Final Assembly

Part Numbers 295542, 295543, 295544, 295545

Ref.	Part	Description	Qty.
1	295810	Spray gun handle	1
2	15B772	Air hose	1
3	295596	Coupler plug	1
4	295597	Coupler	1
5	296834	R-gun block screen screw assembly (includes 6, 7, 8, 9)	1
6		R-gun block screen screw	1
7	296693	Screen screw seal (pack of 2)	-
	296723	Screen screw seal (pack of 10)	-
8	296792	Screen, 80 mesh (pack of 10)	-
	296724	Screen, 80 mesh (pack of 50)	-
9	296722	Check valve assembly (pack of 10)	-
10	295384	Gun block	1
11		Module; see **GX-7A Mix Module Kit**, page 45	1
12	296976	PCD body	1
13		Tip; see **Tip Kits**, page 50	1
14	296978	Front packing (pack of 5)	1
15	295868	O-ring	1
16	296832	PCD retainer	1
17	296831	Air cap	1
18	296128	Coupling block gasket (pkg 2)	1
19	295433	Coupling block mounting screw	1
	296979	Coupling block mounting screw kit (pack of 2)	-
20	296833	A-gun block screen screw assembly (includes 6, 8, 9, 21)	1
21		A-gun block screen screw	1
22	296828	Rear packing retainer	1
23	296829	Rear seal packing (pack of 5)	-
24	296830	Rear seal retainer	1
25	16K136	Valving rod	1
26	100030	Fitting	1

GX-7 DI Model Final Assembly (295541)

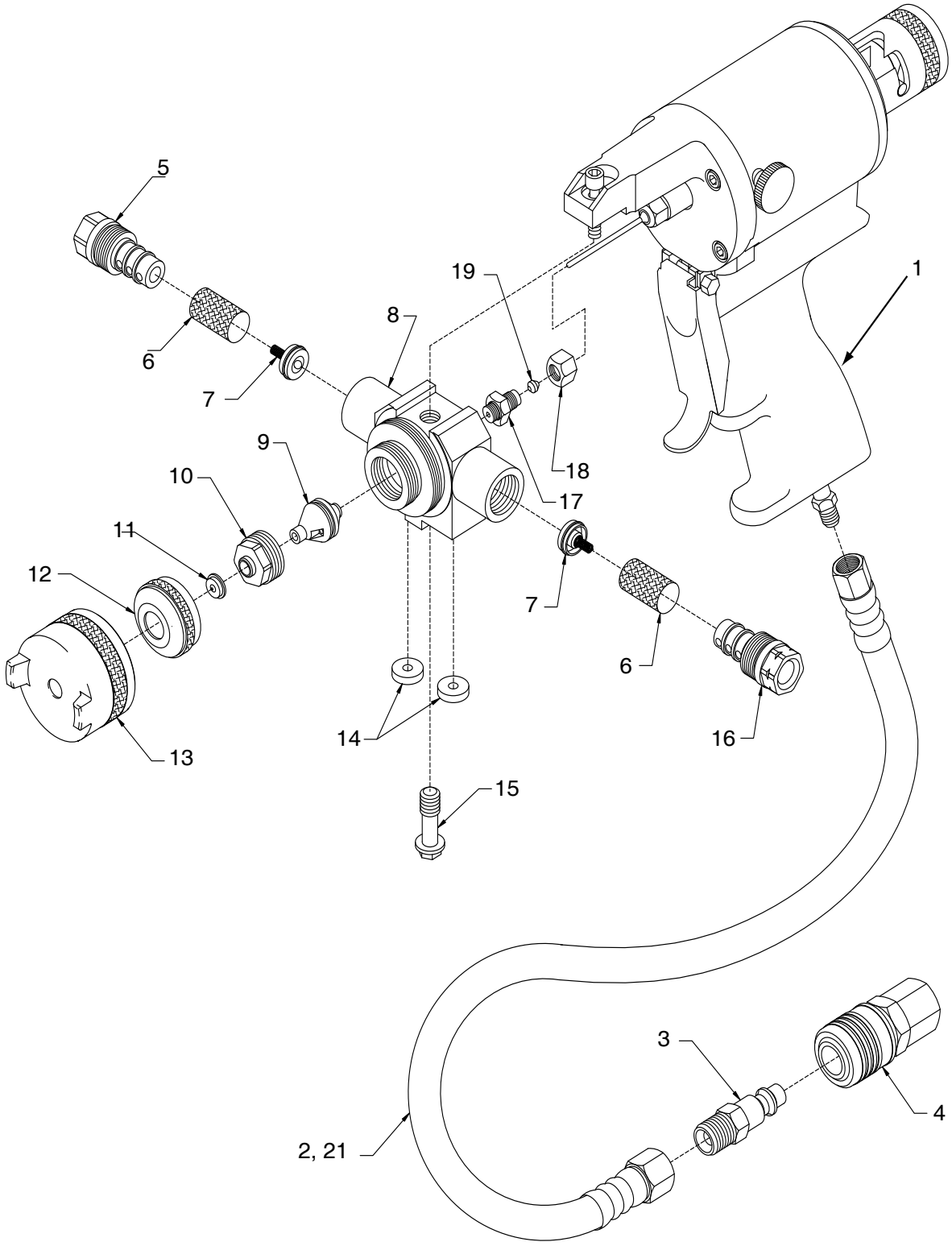

GX-7 DI Model Final Assembly (295541)

Ref.	Part	Description	Qty.
1	295809	Spray gun handle assembly	1
2	15B772	Air hose, 1/4 in. x 23 in. (FXF)	1
3	295596	Coupler plug	1
4	295597	Coupler	1
5	295835	R-screen screw	1
6	296792	Screen, 80 mesh (pack of 10)	-
	296724	Screen, 80 mesh (pack of 50)	-
7	296713	Check valve assembly (pack of 2)	2
8	295860	Gun block	1
9		Module; see **GX-7 DI Model Specifications**, page 49	1
10	295837	Module retainer	1
11		Tip; see **Tip Kits**, page 50	1
12	296865	Tip retainer	1
13	295838	Air cap	1
14	296128	Coupling block gasket (pack of 2)	-
15	295433	Coupling block mounting screw	1
	296979	Coupling block mounting screw (pack of 2)	-
16	295834	A-screen screw	1
17	295836	Rear seal gland	1
18	296864	Rear seal retainer assembly	1
19	296829	Rear seal packing (pack of 5)	-
20	295383	Coupling block (not shown)	1
21	100030	Fitting	1

GX-7 400 Model Final Assembly (295540)

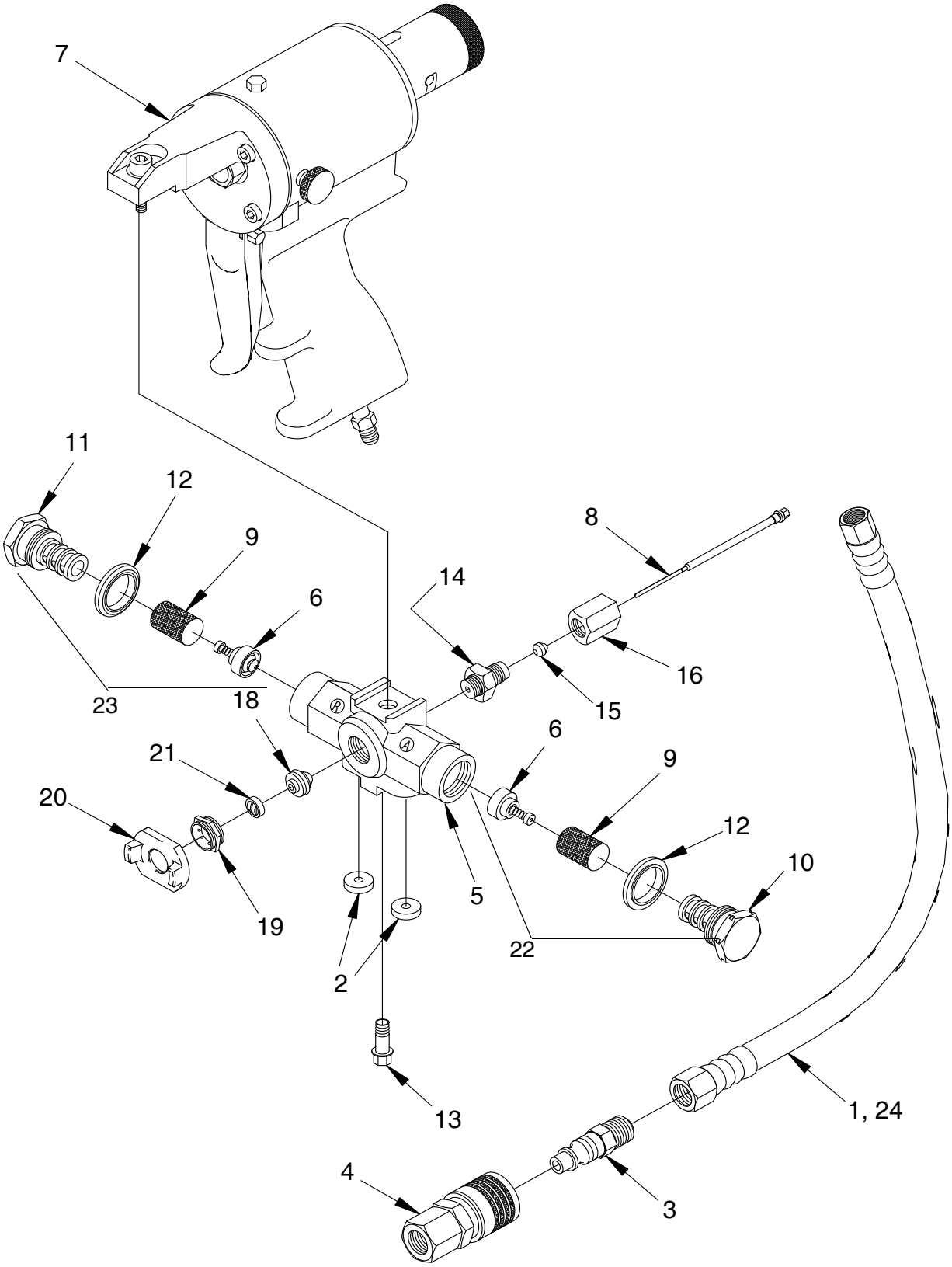

GX-7 400 Model Final Assembly (295540)

Ref.	Part	Description	Qty.
1	15B772	Air hose	1
2	296128	Coupling block gasket (pack of 2)	-
3	295596	Coupler plug	1
4	295597	Coupler	1
5	295384	Gun block (includes 13)	1
6	296722	Check valve assembly (pack of 10)	-
7	295799	Spray gun handle assembly	1
8	16K136	Valving rod	1
9	296792	Screen-80, mesh (pack of 10)	-
	296724	Screen-80, mesh (pack of 50)	-
10		A-Screen screw	1
11		R-Screen screw	1
12	296693	Screen screw seal (pack of 2)	-
	296723	Screen screw seal (pack of 10)	-
13	295433	Coupling block mounting screw	1
	296979	Coupling block mounting screw kit (pack of 2)	-
14	296828	Rear packing retainer	1
15	296829	Rear seal packing (pack of 5)	1
16	296830	Rear seal retainer	1
18		Module; see **GX-7 400 Mix Module Kit**, page 47	1
19	296836	Retainer	1
20	296837	Air cap	1
21		Tip; see **Tip Kits**, page 50	1
22	296833	A-gun block screen screw assembly (includes 6, 9, 10, 12)	-
23	296834	R-gun block screen screw assembly (includes 6, 9, 10, 12)	-
24	100030	Fitting	1

GX-7A Model Handle Assembly (24K734)

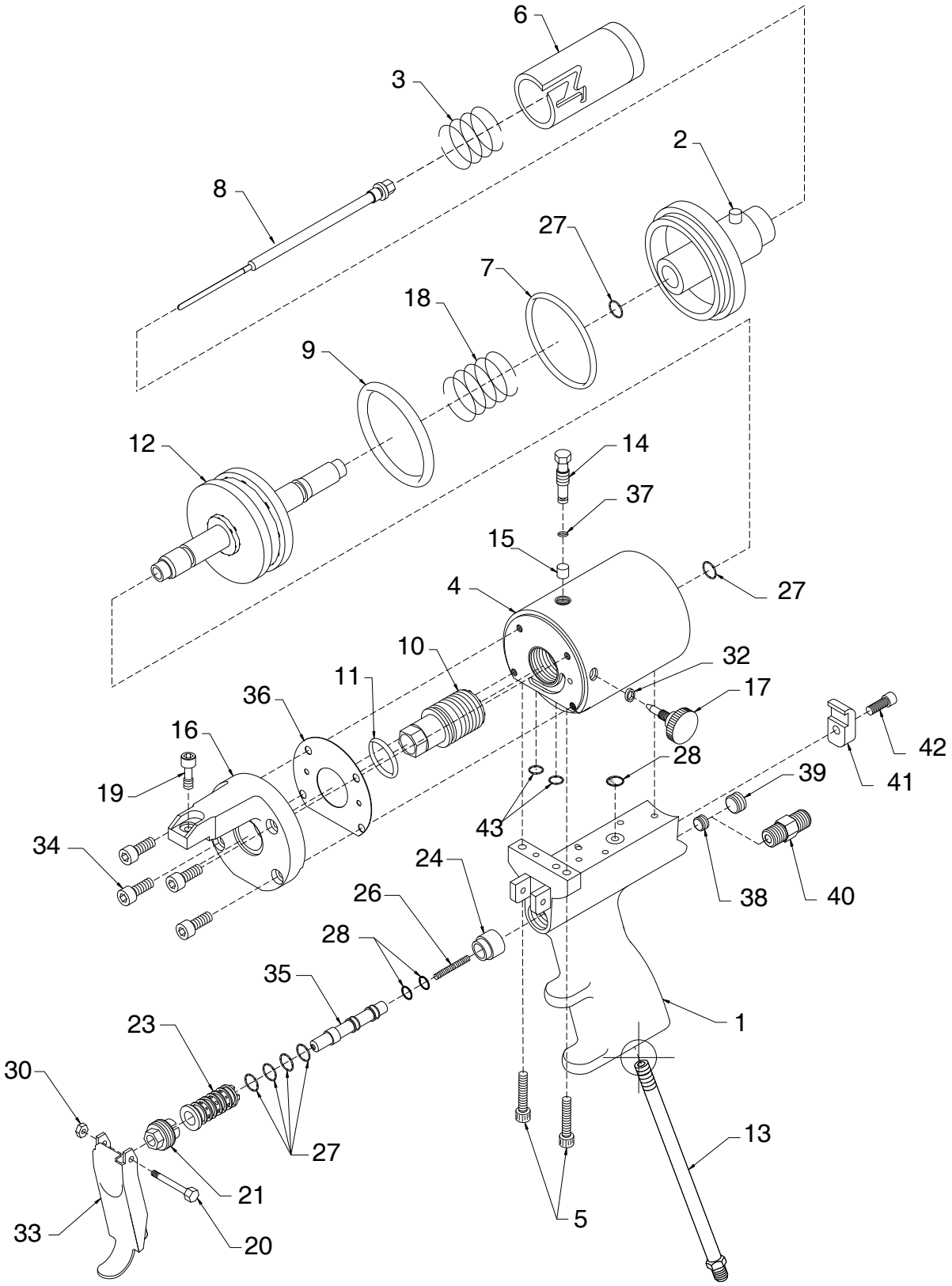

GX-7 Model Handle Assembly (24K734)

Ref.	Part	Description	Qty.
1	296862	Spray gun handle	1
2	295678	Cylinder end cap assembly	1
3	295676	Spring	1
4	295675	Air cylinder	1
5	295709	Socket head cap screw, 8-32 x 3/4 in.	2
6	295680	Two position stop	1
7†	295681	O-ring	1
8◆	16K136	Valving rod	1
9†	295683	O-ring	1
10	295663	Cylinder front stop	1
11†	514279	O-ring	1
12	295664	Air piston assembly	1
13	295665	Pipe nipple	1
14	295666	Stop clamp screw	1
15†	295667	Nylon pellet	1
16	295673	Gun block mount	1
17	295677	Air needle valve	1
18	295668	Spring	1
19	295669	Socket head cap screw, 1/4-28 x 5/8	1
20	295671	Trigger mounting screw	1
21	295688	Valve nut	1
23	295686	Spool valve liner	2
24	295689	Spring seat	1
26❄	296971	Air valve spring	1
27†❄	106555	O-ring,	6
28†❄	C20988	O-ring, fluoroelastomer	3
30	295438	Locknut, elastic stop nut, 5-40	1
32†	295405	Needle valve packing	1
33	295692	Spray gun trigger	1
34	295684	Socket head cap screw, 10-32 x 1/2	4
35	295687	Spool valve	1
36†	295674	Gasket	1
37†	295706	O-ring, Neoprene	1
38	295693	Pipe plug, flush seal, 1/6 NPT	1
39	295662	Pipe plug, flush seal, 1/8 NPT	1
40	103656	Hex nipple, 1/8 NPT (optional)	1
41	295690	Cylinder clamp	1
42	C20003	Socket head cap screw, 10-32 x 1/2	1
43†	295685	O-ring	2

† *Parts included in Handle Seal Rebuild Kit 296895 (purchase separately).*

❄ *Parts included in Trigger valve rebuild kit 296897 (purchase separately).*

◆ *Valving rod 16K136 is shipped loose.*

GX-7 DI Model Handle Assembly (295809)

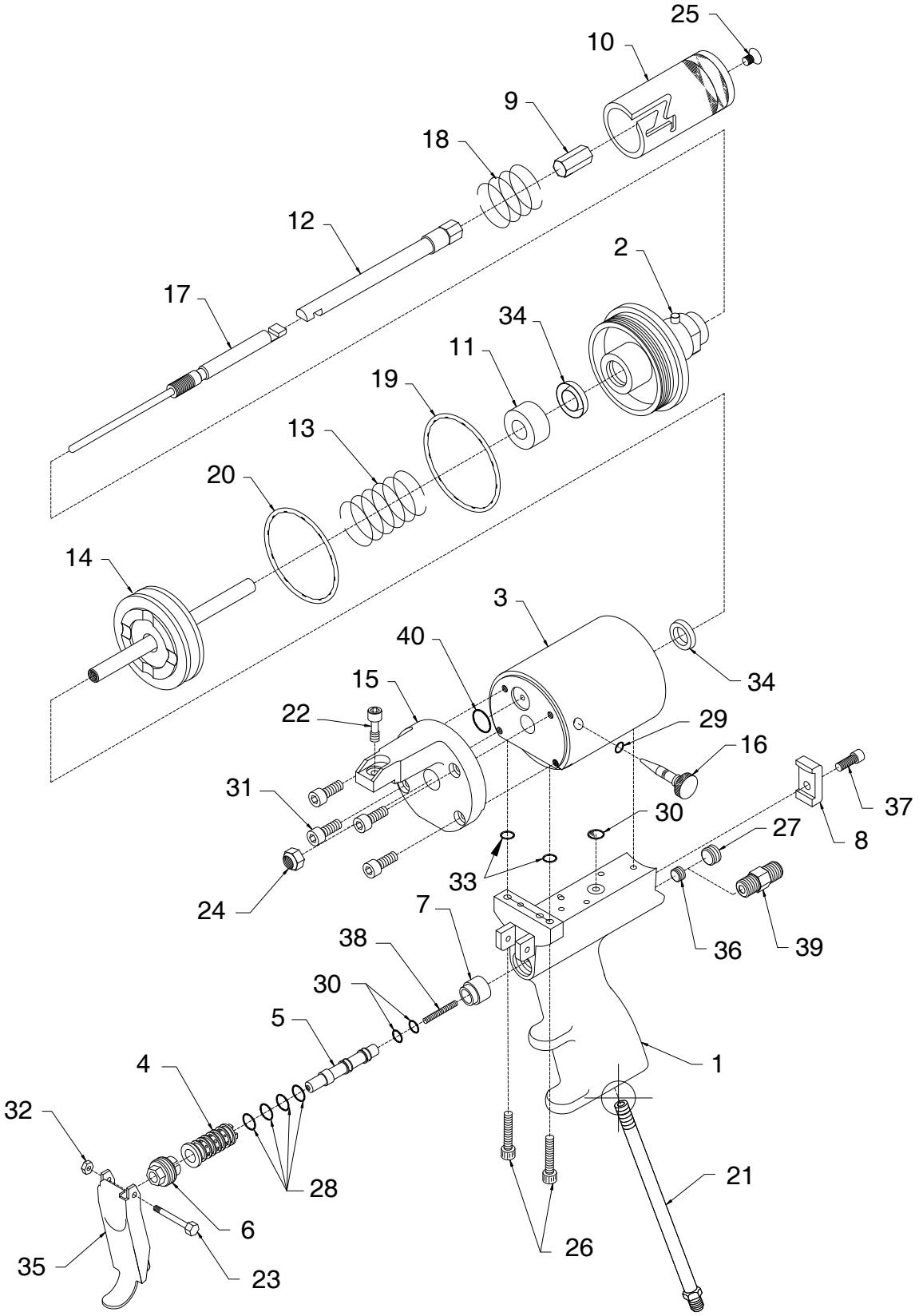

GX-7 DI Model Handle Assembly (295809)

Ref.	Part No.	Description	Qty.
1	296862	Gun handle	1
2	295714	Cylinder end cap assembly	1
3	295715	Air cylinder	1
4	295686	Valve liner	1
5	295687	Valve spool	1
6	295688	Valve retainer nut	1
7	295689	Spring seat	1
8	295690	Cylinder clamp	1
9	295716	Stop, stroke, long	1
10	295717	Two position stop body	1
11	295718	Stroke spacer	1
12	296736	Valving rod holder kit	1
13	295720	Piston spring	1
14	295712	Piston assembly	1
15	295721	Gun block mount	1
16	295713	Air needle valve	1
17	296863	Valving rod, 125 SS	1
18	295676	Spring	1
19†	295681	O-ring	1
20†	295683	O-ring	1
21	295665	Pipe nipple	1
22	295669	Socket head cap screw, 1/4-28 x 5/8	1
23	295671	Trigger mounting screw	1
24	295431	Locknut	1
25	295722	Flat head cap screw, 10-32 x 1/4 in.	1
26	295709	Socket head cap screw, 8-32 x 3/4 in.	2
27	295662	Pipe plug, flush seal, 1/8 in.	1
28❄	106555	O-ring, fluoroelastomer	4
29†	C20988	O-ring, fluoroelastomer	1
30†❄	103337	O-ring, fluoroelastomer	3
31	295684	Socket head cap screw, 10-32 x 5/8 in.	4
32	295438	Stop nut, elastic	1
33†	295685	O-ring	2
34†	295496	U-cup	2
35	295692	Trigger	1
36	295693	Pipe plug, flush seal, 1/16 in.	1
37	C20003	Socket head cap screw, 10-32 x 1/2	1
38❄	295442	Spring	1
39	103656	Hex nipple (optional), 1/8 MPT	1
40†	103338	O-ring, fluoroelastomer	1

† *Parts included in Air Cylinder Rebuild Kit 296895 (purchase separately).*

❄ *Parts included in Trigger Valve Rebuild Kit 296897 (purchase separately).*

GX-7 400 Model Handle Assembly (24K733)

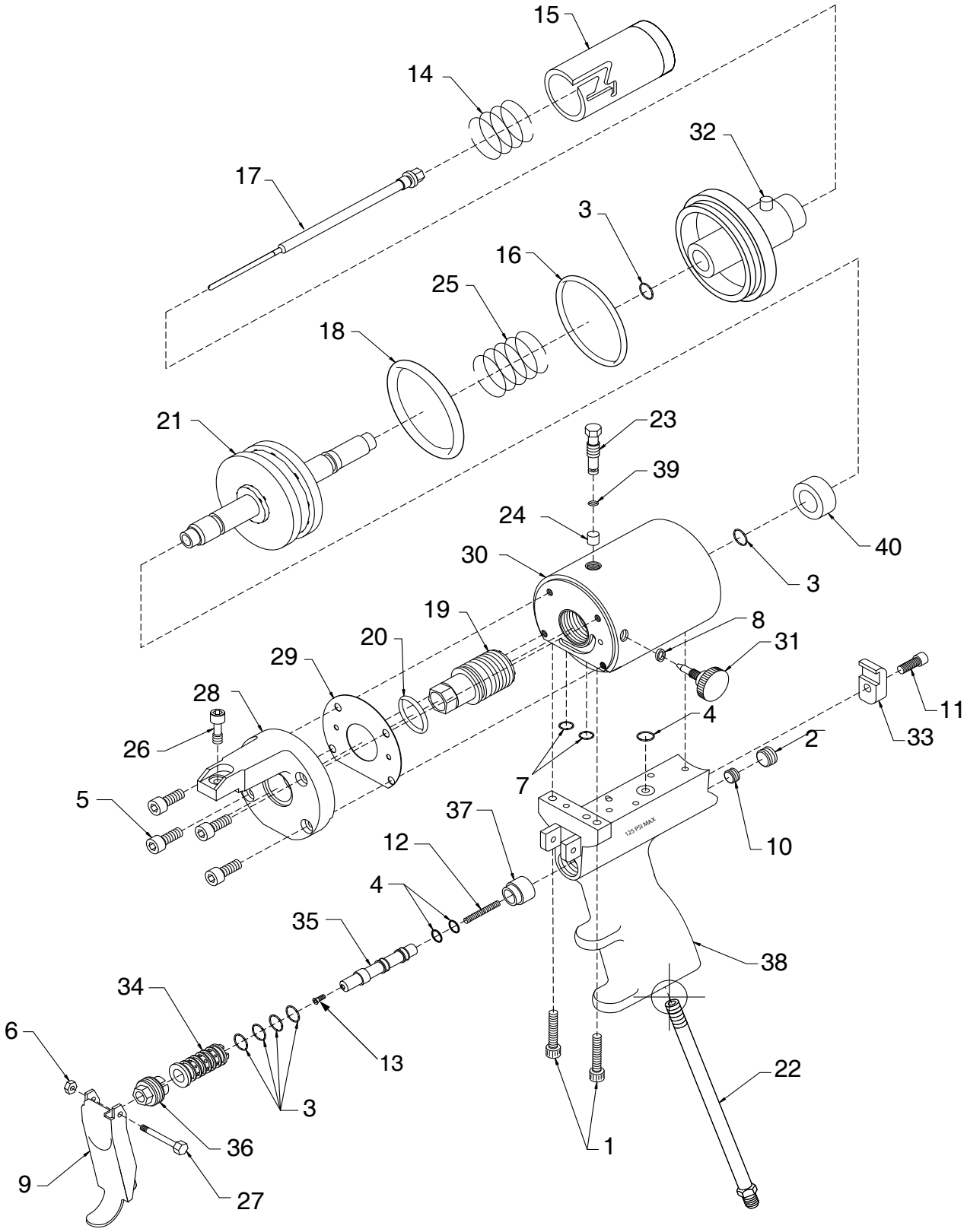

GX-7 400 Model Handle Assembly (24K733)

Ref.	Part	Description	Qty.
1	106245	Cap screw, SCH	2
2	295662	Pipe plug	1
3†❄	106555	Packing o-ring	6
4†❄	103337	Packing o-ring	3
5	295684	Socket head cap screw	4
6	295438	Stop nut, elastic, 5-40	1
7†❄	295685	O-ring	2
8†	295405	Needle valve, packing	1
9	295692	Spray gun trigger	1
10	295693	Pipe plug	1
11	C20003	Socket head cap screw	1
12❄	295442	Spring	1
13	295695	Button head cap screw	1
14	295676	Spring	1
15	295771	Two-position stop	1
16†	295681	O-ring	1
17◆	16K136	Valving rod	1
18†	295683	O-ring	1
19	295663	Front cylinder stop	1
20†	514279	O-ring	1
21	295664	Air piston	1
22	295665	Pipe nipple fitting	1
23	295666	Stop clamp screw	1
24†	295667	Pellet	1
25	295668	Spring	1
26	295669	Socket head cap screw, modified	1
27	295671	Trigger mounting screw	1
28	295673	Gun block base	1
29†	295674	Gasket	1
30	295675	Air cylinder	1
31	295677	Air needle valve	1
32	295678	Cylinder end cap	1
33	295690	Cylinder clamp	1
34	295686	Valve liner	1
35	295687	Valve spool	1
36	295688	Retainer valve nut	1
37	295689	Spring seat	1
38	296862	Gun handle	1
39†	295706	O-ring	1
40	295708	Spacer	1

† *Parts included in Air Cylinder Rebuild Kit 296895 (purchase separately).*

❄ *Parts included in Trigger Valve Rebuild Kit 296897(purchase separately).*

◆ *Valving rod 16K136 is shipped loose.*

Coupling Block Assembly (295383)

All models

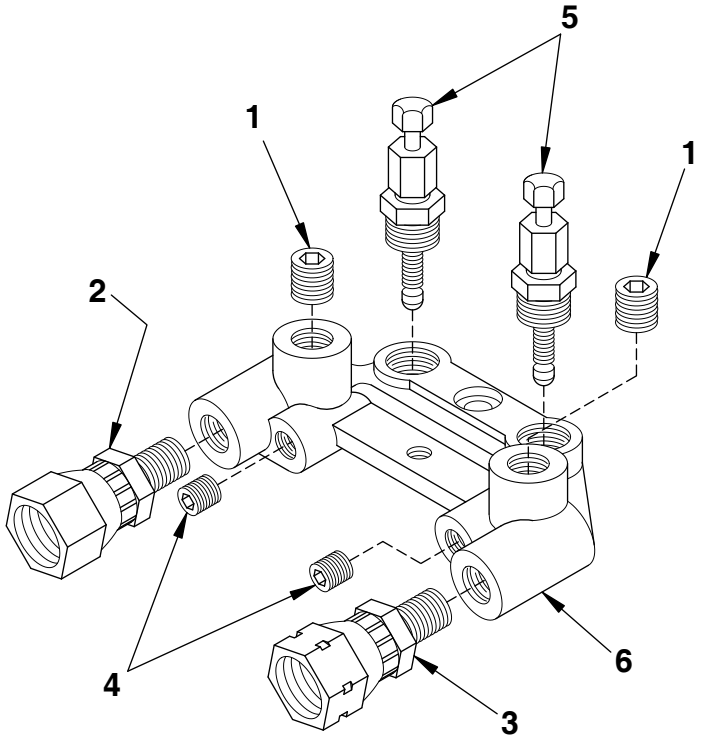

Ref.	Part	Description	Qty.
1	295662	Pipe plug, flush seal, 1/8 in.	2
2	117634	R-swivel fitting	1
3	117635	A-swivel fitting	1
4	295693	Pipe plug, flush seal, 1/16 in.	2
5	296970	Manual valve assembly	2
6	296215	Coupling block	1

Specifications

GX-7A Mix Module Kit

Module Kit†❄		Module Only		Cleanout Tool			
Part No.	Size Ref.	Part No.	Size Ref.	(A) Iso Port Part No.	Diameter in/(mm)	(R) Resin Port Part No.	Diameter in/(mm)
296909	#1 Round	296907	#1 Round	246807	.0320 (.81)	246807	.032 (.81)
296916	#2 Round	296225	#2 Round	246816	.018 (.45)	246816	.018 (.45)
296919	#3 Round	296226	#3 Round	276984	.0225 (.57)	246816	.018 (.45)
296921	#4 Round	n/a	#4 Round	296290	.035 (.89)	246807	.032 (.81)
296923	#5 Round	296228	#5 Round	276984	.0225 (.57)	248892	.028 (.71)
296925	#7 Flat	296230	#7 Flat	248892	.028 (.71)	248892	.028 (.71)
296906	#10 Flat	296233	#10 Flat	296291	.036 (.91)	296291	.036 (.91)
296910	#12 Flat	296130	#12 Flat	296286	.021 (.53)	296286	.021 (.53)
296915	#16 Round	n/a	#16 Round	248892	.028 (.71)	248892	.028 (.71)
296917	#22 Round	n/a	#22 Round	276984	.0225 (.57)	276984	.0225 (.57)
296875	A2 Pour	n/a	A2 Pour	246816	.018 (.45)	246816	.018 (.45)
296876	A3 Pour	n/a	A3 Pour	248640	.039 (.99)	248640	.039 (.99)
296868	A5 Pour	n/a	A5 Pour	246807	.032 (.81)	246807	.032 (.81)
296870	A5-FS Pour	n/a	A5-FS Pour	246807	.032 (.81)	246807	.032 (.81)

Each module has a specially sized cleanout tool. To avoid damage to module, use correct cleanout tool.

† Module Kits include one mix module and both cleanout tools. See following table.

❄ Some Module Kits also available in packs. See following table.

Mix Module Kit		
Part No.	Size Ref.	Qty./Pack
296908	#1 Round	12 (with 2 drills)
296869	A5 Pour	12
296871	A5-FS Pour	12
296872	A10 Pour	12
296873	A20 Pour	12
296874	A2 Pour	12 (with 2 drills)
296911	STD Blank	5
296912	STD Blank	100
296913	PEEK Blank	5

Set-Up Chart for GX-7A Model

Pres-sure (psi)	Output (lbs/min)	Pattern Dia. (inches)	Module Part No.	Polyol Port Size	No. Orifices	Iso Port Size	No. Orifices	Tip
Round Spray Pattern								
1000	22	❄22	296909 (#1)	.0320	4	.0320	4	296712
1000	12	❄12	296919 (#3)	.0180	4	.0225	4	296710
1600	16	❄14	296923 (#5)	.0280	4	.0225	4	296710
2000	30	❄24	296909 (#1)	.0320	4	.0320	4	296694
3000	40	❄24	296921 (#4)	.0320	4	.0350	4	296695
Pour Pattern								
600	3.5	N/A	296875 (A2)	.0180	1	.0180	1	296697
600	12	N/A	296876 (A3)	.0390	1	.0390	1	296697
Fan Spray Pattern								
1000	12	❖ 16 x 4	296925 (#7)	.0280	2	.0280	2	296704
1500	24	❖ 22 x 4	296906 (#10)	.0360	2	.0360	2	296703
1500	5	❖ 16 x 3	296910 (#12)	.0210	2	.0210	2	296705

❄ At 24 in. above substrate
❖ At 18 in. above substrate

GX-7 400 Mix Module Kit

Module Kits			Cleanout Drill			
Part No.	Size Ref.	Quantity	Iso Port Part No.	Diameter in/(mm)	Polyol Port Part No.	Diameter in/(mm)
296885 296884	402 Round	1 12	246816	.018 (.45)	246816	.018 (.45)
296859 296860	451 Fan	1 12	246816	.018 (.45)	246816	.018 (.45)
296888 296887	452 Fan	1 12	246631	.020 (.51)	246631	.020 (.51)
296891 296890	453 Fan	1 12	296287	.025 (.64)	276984	.0225 (.57)

CAUTION
Each module kit includes cleanout drills. To avoid damage to module, use correct cleanout drill.

Module Only	
Part No.	Size Ref.
296316	451 Fan
295379	453 Fan

Set-up Chart for GX-7 400 Model

Pres-sure (psi)	Output (lbs/min)	Pattern Dia. (inches)	Module Part No.	Polyol Port Size	No. Orifices	Iso Port Size	No. Orifices	Tip
Round Spray Pattern								
1500	3.5	✖ 8	296885 (402)	.0180	1	.0180	1	296858
Fan Spray Pattern								
1500	3.5	❖ 16 x 3	296859 (451)	.0180	1	.0180	1	296853
1500	4.5	❖ 16 x 3	296888 (452)	.0200	1	.0200	1	296853
1500	8.0	❖ 16 x 3	296891 (453)	.0225	2	.0250	2	296855

✖ At 24 in. above substrate
❖ At 18 in. above substrate

Tip Kits (for GX-7 400 Gun)		
Part No.	**No. Ref.**	**Quantity**
296858	40 Round	1
296852	210 Fan	1
296853	212 Fan	1
296854	212 Fan	5
296855	213 Fan	1
296856	213 Fan	5
296857	214 Fan	1
296892	TOM	1

GX-7 DI Model Specifications

Module/Tip Data for Chemical Sprayed at 2500 PSI				
✖ Module Kit	Cleanout Drill	Ref. No.	❄Pattern	❄Output (lbs/min)
Fan Spray Pattern				
296900 (#2)	246625 (.086 diameter)	212	12 in. wide	12
		206	20 in. wide	22
		213	12 in. wide	12
		204	20 in. wide	21
296901 (#4)	248892 (.028 diameter)	212	10 in. wide	8
		206	24 in. wide	11
		204	18 in. wide	10
296903 (#5)	246816 (.018 diameter)	212	11 in. wide	4
		213	12 in. wide	4
		208	8 in. wide	4
Round Spray Pattern				
296903 (#5)	246816 (.018 diameter)	40	4 in. diameter	8
		55	7 in. diameter	9.5
		70	8 in. diameter	9.75
		90	10 in. diameter	9.75

❄ *Actual results may vary due to chemical system characteristics, temperature, pressure, and ratio.*

✖ *Includes appropriate cleanout drills.*

Mix Module Kit		
Part No.	Size Ref.	Quantity
296898	PEEK 018/018	1
296899	PEEK 028/028	1

Module Only		
Part No.	Size Ref.	Qty / Pack
296902	#5	1
25M200	#5	12

Tip Kits

For GX-7A and GX-7 DI Models

Round Tip Kits		
Part No.	Size	Qty.
296708	40	1
296709	46	1
296717	55	5
296710	70	1
296718	70	5
296711	80	1
296719	80	5
296712	90	1
296720	90	5
296694	100	1
296714	100	5
296695	110	1
296696	110	5
296697	125	1
296877	140	1

Flat Tip Kits		
Part No.	No. Ref.	Qty.
296698	202	1
296699	203	1
296700	204	1
296701	206	1
296702	208	1
296703	209	1
296704	210	1
296715	210	5
296882	212.5 SPEC	1
296705	212	1
296716	212	5
296706	213	1
296883	213-SPEC	1
296707	215	1

Tool Kit

296835
GX-7A, GX-7 DI, and GX-7 400 models:

Part	Description
117642	5/16 in. Hex Nut Driver
117661	Pine Vise (dual reversible chucks)
296199	1/2 in. Combination Wrench
296188	5/8 in. Combination Wrench
295899	5/16 x 3/8 in. Open End Wrench
127748	Adjustable Wrench
296191	Gasket Removal Tool
296192	Air Valve Tool
295898	Cleanout Brush

Part	Description
---	3/32 in, 9/64 in, 5/32 in. and 3/16 in. Allen Wrenches
---	#58 and #60 Mix Module Cleanout Drills (see Mix Module Specifications)
---	5/32 in., 1/8 in., and 6/64 in. Cleanout Drills (use varies depending on model)

Technical Data

Category	Data
Air Supply	100-125 psi (0.7-0.9 MPa, 6.9-8.6 bar)
Maximum Operating Pressure	3500 psi (24 MPa, 240 bar)
Maximum Output ❄	GX-7A Model: 40 lbs/min (18 kg/min) GX-7 DI Model: 22 lbs/min (10 kg/min) GX-7 400 Model: 8 lbs/min (3.6 kg/min)
Minimum Output ❄	GX-7A Model: 4 lbs/min (1.8 kg/min) GX-7 DI Model: 4 lbs/min (1.8 kg/min) GX-7 400 Model: 3.5 lbs/min (1.6 kg/min)
Height	9 in. (23 cm)
Length	9.5 in. (24 cm)
Width	4.5 in. (11 cm)
Weight	3.5 lbs. (1.5 kg)
Mixing	GX-7A Model: Internal impingement, airless atomization, solvent-free, mechanically self cleaning GX-7 DI Model: Internal direct impingement, airless atomization, solvent-free, mechanically self cleaning GX-7 400 Model: Internal direct impingement, airless atomization, solvent-free, mechanically self cleaning

❄ *Theoretical: actual results will vary with operating conditions*

Graco Standard Warranty

Graco warrants all equipment referenced in this document which is manufactured by Graco and bearing its name to be free from defects in material and workmanship on the date of sale to the original purchaser for use. With the exception of any special, extended, or limited warranty published by Graco, Graco will, for a period of twelve months from the date of sale, repair or replace any part of the equipment determined by Graco to be defective. This warranty applies only when the equipment is installed, operated and maintained in accordance with Graco's written recommendations.

This warranty does not cover, and Graco shall not be liable for general wear and tear, or any malfunction, damage or wear caused by faulty installation, misapplication, abrasion, corrosion, inadequate or improper maintenance, negligence, accident, tampering, or substitution of non-Graco component parts. Nor shall Graco be liable for malfunction, damage or wear caused by the incompatibility of Graco equipment with structures, accessories, equipment or materials not supplied by Graco, or the improper design, manufacture, installation, operation or maintenance of structures, accessories, equipment or materials not supplied by Graco.

This warranty is conditioned upon the prepaid return of the equipment claimed to be defective to an authorized Graco distributor for verification of the claimed defect. If the claimed defect is verified, Graco will repair or replace free of charge any defective parts. The equipment will be returned to the original purchaser transportation prepaid. If inspection of the equipment does not disclose any defect in material or workmanship, repairs will be made at a reasonable charge, which charges may include the costs of parts, labor, and transportation.

THIS WARRANTY IS EXCLUSIVE, AND IS IN LIEU OF ANY OTHER WARRANTIES, EXPRESS OR IMPLIED, INCLUDING BUT NOT LIMITED TO WARRANTY OF MERCHANTABILITY OR WARRANTY OF FITNESS FOR A PARTICULAR PURPOSE.

Graco's sole obligation and buyer's sole remedy for any breach of warranty shall be as set forth above. The buyer agrees that no other remedy (including, but not limited to, incidental or consequential damages for lost profits, lost sales, injury to person or property, or any other incidental or consequential loss) shall be available. Any action for breach of warranty must be brought within two (2) years of the date of sale.

GRACO MAKES NO WARRANTY, AND DISCLAIMS ALL IMPLIED WARRANTIES OF MERCHANTABILITY AND FITNESS FOR A PARTICULAR PURPOSE, IN CONNECTION WITH ACCESSORIES, EQUIPMENT, MATERIALS OR COMPONENTS SOLD BUT NOT MANUFACTURED BY GRACO. These items sold, but not manufactured by Graco (such as electric motors, switches, hose, etc.), are subject to the warranty, if any, of their manufacturer. Graco will provide purchaser with reasonable assistance in making any claim for breach of these warranties.

In no event will Graco be liable for indirect, incidental, special or consequential damages resulting from Graco supplying equipment hereunder, or the furnishing, performance, or use of any products or other goods sold hereto, whether due to a breach of contract, breach of warranty, the negligence of Graco, or otherwise.

FOR GRACO CANADA CUSTOMERS
The Parties acknowledge that they have required that the present document, as well as all documents, notices and legal proceedings entered into, given or instituted pursuant hereto or relating directly or indirectly hereto, be drawn up in English. Les parties reconnaissent avoir convenu que la rédaction du présente document sera en Anglais, ainsi que tous documents, avis et procédures judiciaires exécutés, donnés ou intentés, à la suite de ou en rapport, directement ou indirectement, avec les procédures concernées.

Graco Information

For the latest information about Graco products, visit www.graco.com.
For patent information, see www.graco.com/patents.

TO PLACE AN ORDER, contact your Graco distributor or call to identify the nearest distributor.
Phone: 612-623-6921 or Toll Free: 1-800-328-0211 Fax: 612-378-3505

All written and visual data contained in this document reflects the latest product information available at the time of publication. Graco reserves the right to make changes at any time without notice.

Original instructions. This manual contains English. MM 311321

Graco Headquarters: Minneapolis
International Offices: Belgium, China, Japan, Korea

GRACO INC. AND SUBSIDIARIES • P.O. BOX 1441 • MINNEAPOLIS MN 55440-1441 • USA
Copyright 2005, Graco Inc. All Graco manufacturing locations are registered to ISO 9001.
www.graco.com
Revision R, January 2018